HygroPort I.S. Hygrometer
User's Manual

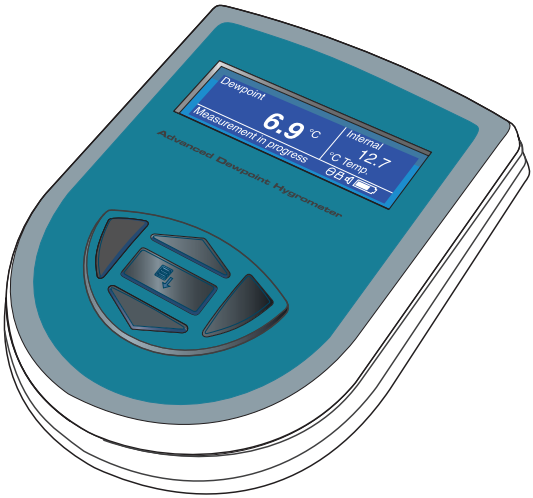

KAHN INSTRUMENTS, INC.
885 Wells Road, Wethersfield,CT 06109
Phone: 860-529-8643 Fax: 860-529-1895
E-mail: hygros@kahn.com www.kahn.com

Inside front cover (blank)

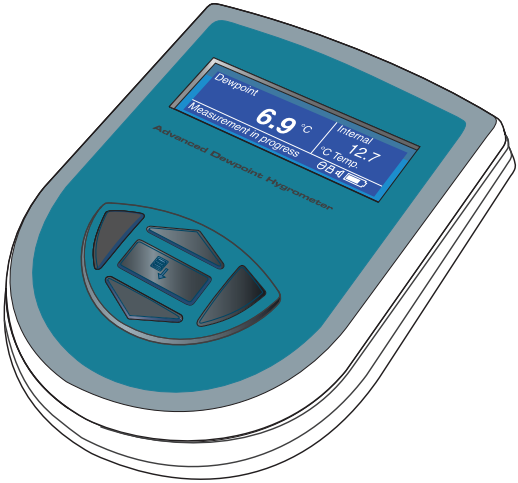

HygroPort I.S. - Advanced Dewpoint Hygrometer
(for use in hazardous areas)

Contents

Appendices

Figures

Tables

Appendices

Safety

The manufacturer has designed this equipment to be safe when operated using the procedures detailed in this manual. The user must not use this equipment for any other purpose than that stated. Do not apply values greater than the maximum values stated.

This manual contains operating and safety instructions, which must be followed to insure the safe operation and to maintain the equipment in a safe condition. The safety instructions are either warnings or cautions issued to protect the user and the equipment from injury or damage. Competent personnel using good engineering practice must follow all procedures in this manual.

Electrical Safety

The instrument is designed to be completely safe when used with options and accessories supplied by the manufacturer for use with the instrument. The instrument is powered by an internally mounted rechargeable battery. This battery should never be allowed to fully discharge. The input power supply voltage limits for the battery charger supplied with the instrument are 100 V AC to 240 V AC, 47 to 63Hz. Refer to Appendix A.

NOTE: No other battery charger unit, other than that supplied with the instrument should be used.

NOTE: Do not allow the battery to fully discharge.

Pressure Safety

DO NOT permit pressures greater than the safe working pressure to be applied to the instrument. The specifed safe working pressure (SWP), for this instrument is 350 barg (5076 psig). Refer to Appendix A - Technical Specifications.

Toxic Materials

The use of hazardous materials in the construction of this instrument has been minimized. During normal operation it is not possible for the user to come into contact with any hazardous substance which might be employed in the construction of the instrument. Care should, however, be exercised during maintenance and the disposal of certain parts.

Repair and Maintenance

The instrument must be maintained by Kahn Instruments, Inc. to www.kahn.com for details.

Calibration

The recommended calibration interval for the Hygroport I.S. is 12 months. The instrument should be returned to Kahn Instruments, Inc. for re-calibration.

FCC Declaration

HygroPort I.S. Advanced Dewpoint Hygrometer.

This Device complies with FCC Rules Part 15 Subpart B Unintentional Radiators
Class B digital devices. Operation is subject to the following conditions:

1) This device may not cause harmful interference
2) This device must accept any interference received, including interference that may cause undesired operation.

Note: This product has been tested and found to comply with the limits or Class B digital devices, pursuant to Part 15 of the FCC rules. This product generates, uses and can radiate radio frequency energy and, if not installed and used in accordance with the instructions, may cause harmful interference to radio communications. However, there is no guarantee that interference will not in a particular installation. If this product does cause harmful interference to radio reception, which may be determined by turning the product on & off, the user is encouraged to try to correct the interference by one or more of the following measures:

- Reorient or relocate the receiving antenna,
- Increase the separation between the product and receiver,
- Connect the equipment into an outlet on a circuit different from that to which the receiver is connected
- Consult the dealer or an experienced radio/TV technician for help.

This product must be operated as per the operating instructions provided.
Do not make any alterations or modifications to the product. Any unauthorised alterations or modifications made to this product may require you to stop operating the product.

Canadian Radio Interference Regulations.
This Class B digital product complies with Canadian ICES-003, CISPR 22 :1997.
Règlement canadien sur les interférences radio.
Ce produit numérique de classe B est conforme à la norme NMB-003, CISPR 22: 1997.

Signed for, and on behalf of,
Kahn Instruments Ltd.

Andrew M.V. Stokes, Technical Director

Issue date: 05/2011

Abbreviations

The following abbreviations are used in this manual:

AC	alternating current
atm	pressure unit (atmosphere)
bar	pressure unit (=100 kP or 0.987 atm)
Bar a	bar absolute
Bar g	bar gauge
°C	degrees Celsius
°F	degrees Fahrenheit
K	Kelvin (absolute temperature)
COM	common
Contd	continued
DC	direct current
ENT	enter (select)
ft	foot (feet)
Hz	Hertz
In	inch(es)
in^2	square inch(es)
N/C	not connected (no connection)
kg	kilogram(s)
kΩ	kilohm(s)
lb	pound
LSD	least significant digit
m	meter(s)
mA	milli Ampere
max	maximum
min	minute(s)
mm	millimeter(s)
MPa	megapascal (Pascals x106)
mV	milli Volt(s)
No.	number
PIN	personal identification number
ppmv	parts per million (by volume)
rdg	reading
%rdg	percentage of reading
RS232	serial data transmission standard
Rx	receive
SWP	safe working pressure
sec	second(s)
temp	temperature
Tx	transmit
V	volts
Ω	Ohms

Warnings

The following general warning listed below is applicable to this instrument. It is repeated in the text in the appropriate locations.

Where this hazard warning symbol appears in the following sections it is used to indicate areas where potentially hazardous operations need to be carried out.

1 INTRODUCTION

The HygroPort I.S. Advanced Dewpoint Hygrometer is a portable instrument designed for the on-line measurement of moisture content in non-corrosive gases in hazardous locations, over an operational range of -148 to +68°F (-100 to +20°C).

The instrument is independently assessed and certificated as being intrinsically safe and fully compatible with safe operation for Class I, Division 1, Groups A, B, C, D and Class 1, ZONE 0.

The instrument is contained within a rugged case, sealed to NEMA4 (IP66) standard and is powered by an internally mounted Nickel Metal Hydride (NiMH) battery designed to typically provide 24 hours continuous use between charges. Continuous battery charge status indication is provided. Additional battery status information is provided by a "battery low" warning beep and indicator. The HygroPort I.S. is equipped with an internally mounted ceramic sensor, which is enhanced for a quicker response to dewpoints as dry as -103°F (-75°C) dewpoint.

A graphical display presents the dewpoint data in large format characters and simultaneously provides a primary display of real time dewpoint readings and a secondary display, in smaller characters, for the external transmitter input. If no external input is programmed, gas temperature, measured by the internal sensor, is displayed by default.

A fully programmable, real-time, datalogging facility is provided which has an internal memory capacity of 8Mb, capable of storing up to 10,000 logs per file (typically giving a maximum of 64 log files).

A Bluetooth, wireless communication system is provided, giving access to a dedicated, PC-based HygroPort I.S. Software Application Package which provides the facility for handling the logged data files and uploading and downloading instrument parameters.

A user-friendly operator interface provides easy access to all levels of the instrument's functions.

An easy to follow calibration routine is built into the instrument's software. The calibration routines are described in Section 7.

Two versions of the instrument are available, a HygroPort (standard) version and this HygroPort I.S. (intrinsically safe) version.

This manual covers the HygroPort I.S. version only. *Figure 1.1* shows the instrument.

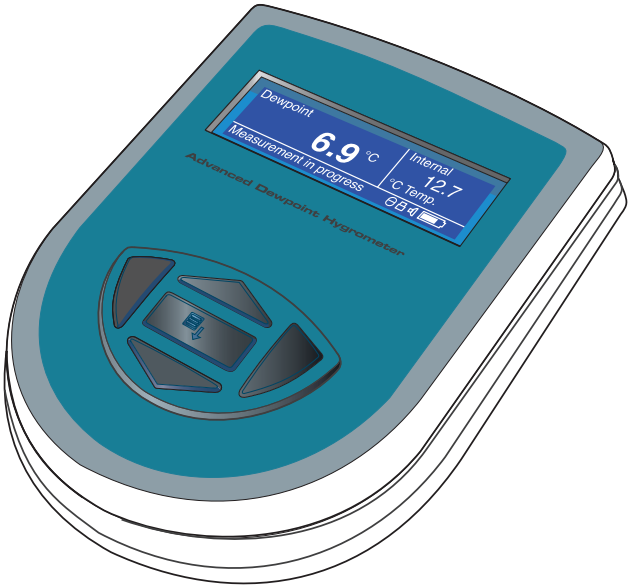

Figure 1.1 *HygroPort I.S. Advanced Dewpoint Hygrometer (for use in hazardous areas)*

2 DESCRIPTION

The controls and indicators associated with the HygroPort I.S. instrument are located on the front panel of the instrument.

Connections to the HygroPort I.S. dewpoint hygrometer, comprising the gas ports, battery charger input connector and input connector for the external transmitter, are all made to the top panel.

Figure 2.1 shows the layout of these controls and Table 2.1 describes their respective operational functions.

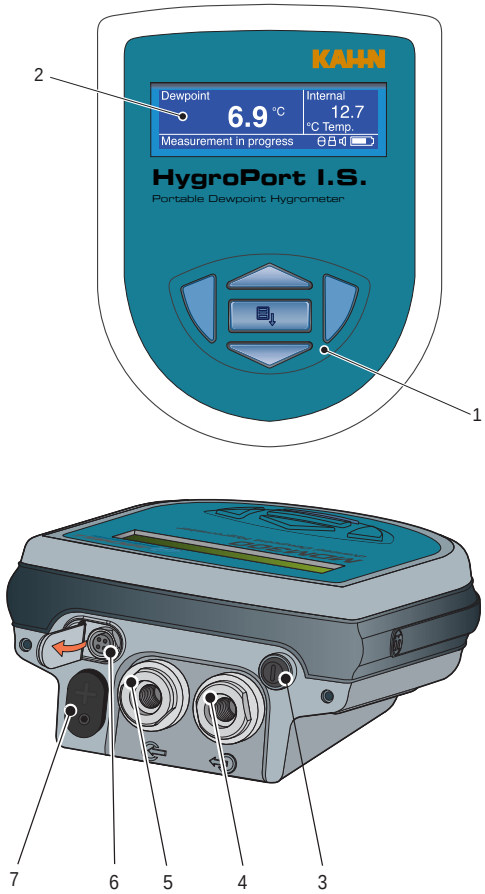

Figure 2.1 *User connections, controls and indicators*

2.1 Controls and Indicators

Item	Panel	Description
1	Front	Function keys. Refer to Table 2.2 for the details of these keys.
2	Front	Instrument display. Partitioned to show 3 main panels, a primary display showing internal sensor parameters, a secondary display indicating the external transmitter parameter, and a status display area. The status display area shows icons representing battery charge state, initialization in progress, data logging in progress, keyboard lock status and keyboard beep status.
3	Top	Instrument ON/OFF switch. **NOTE: The instrument does not need be switched ON in order to charge the internal NiMH battery.**
4	Top	Gas output port. Refer to Section 3.5
5	Top	Gas input port. Refer to Section 3.5
6	Top	Analog input connector for external transmitter. By default, this signal is displayed in the secondary display area but may be configured to be displayed as the primary display (refer to Section 2.6.6). If no external input is selected, the internal sensor temperature is displayed by default, (refer to Section 2.6.6). The hinged rubber protection cover should be kept closed when the connector is not in use.
7	Top	Socket for connection of battery charger *(located behind secured cover similar to external transmitter socket cover above).* ***Connection to the battery charger should always be made in a safe area - never in a hazardous area environment.*** The secured cover should be kept screwed on when the connector is not in use. **ONLY USE THE CHARGER PROVIDED** **Never allow the battery to fully discharge**

Table 2.1 Controls and indicators

2.2 Function Keys

The function keys, located below the display, are used to select operations from the Main Menu level (selected by the center key), to enter sub-menu levels and to select and enter parameter variables within those menu levels.

The function key panel is shown (right) and the operation of the keys is as follows:

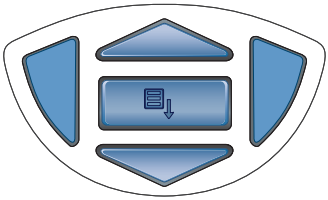

Figure 2.2 *Function keys*

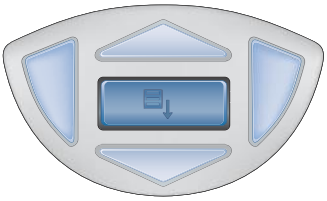

Enter key. Operation of this key from the front page display causes the Passcode Display Screen for entry to the Set-up menus to be displayed.

The Passcode PIN must then be entered, using a combination of the ▲ (up) and ▼ (down) keys located above and below. After each digit is selected, this Enter key should be pressed in order to accept the entered digit. Within the Settings menu and sub-menus, this key is used to highlight and select options and to accept entered values. The passcode pin is 7316.

Scroll down key. From the Passcode entry page, this key is used to reduce the value of the highlighted passcode entry digit.

Within the Set-Up Menu this key is used to highlight one of the Settings sub-menu options for entry to that level which is then entered by pressing the Enter key.

Within sub-menus this key is used to scroll down and highlight options available for selection within that sub-menu.

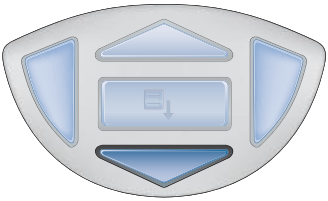

Within sub-menu levels requiring the entry of alpha numeric values e.g. for the entry of datalog parameters, this key is used to decrease the currently displayed value i.e. (Z-A, 9-0). Pressing the key once decreases the selected field by one step. Pressing and holding the key will cause the selected field to be continuously decreased until the key is released.

Scroll up key. From the Passcode entry page, this key is used to increase the value of the highlighted passcode entry digit.

Within the Settings menu this key is used to scroll up through the menu options to select (highlight) a required option. The required sub-menu for that option can then be entered by pressing the Enter key.

Within sub-menus this key is used to scroll up and highlight options available for selection within that sub-menu.

Within sub-menu levels requiring the entry of alpha numeric values, e.g. for the entry of datalog parameters, this key is used to increase the currently displayed field value (i.e. 0-9, A-Z). Pressing the key once increases the selected field by one step. Pressing and holding the key will cause the selected field to be continuously increased until the key is released.

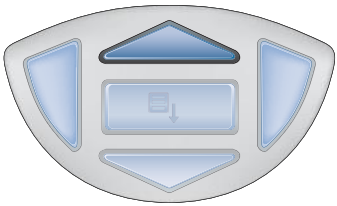

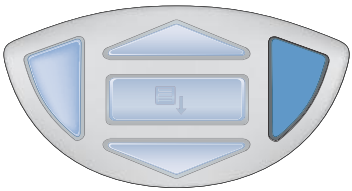

Scroll right key. Within the Logging (datalog) sub-menu levels, where the entry of alpha numeric characters is required, this key is used to shift the insertion point right in the file name entry field.

At each position, a combination of the scroll up and scroll down keys is used to select the required alpha numeric value. When the full field name has been entered, the file is created by pressing the Enter key.

Scroll left/Escape. Within any menu or sub-menu level, pressing this key escapes to the next highest menu above the current level. For example, to return to the Main Display from the Input Passcode screen press this key once. Similarly, to return to the Settings menu from any of its sub-level menus, press this key once. Within the Logging (datalog) sub-menu levels, where the entry of alpha numeric characters is required, this key is used to shift the insertion point to the left in the file name entry field. As the insertion point is shifted to the left, the entry at the former position is deleted.

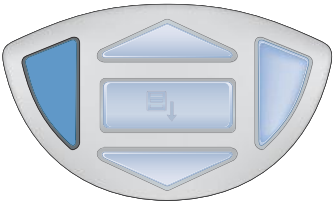

2.3 Instrument Display

The instrument display is divided into three distinct areas - a primary display area, a secondary display area and a status display area (refer to Item 2 in Table 2.1). During normal operation, the internal sensor is configured as the primary (large character) display and can be configured for either internal temperature or external transmitter reading, depending upon how the instrument has been set up.
The graphics display and the associated function keypad (*Figure 2.1),* form the operator interface of the equipment. *Figure 2.3* shows all of the elements of a typical display screen after the instrument's Initialization period has completed.
Table 2.2 details the elements of the display

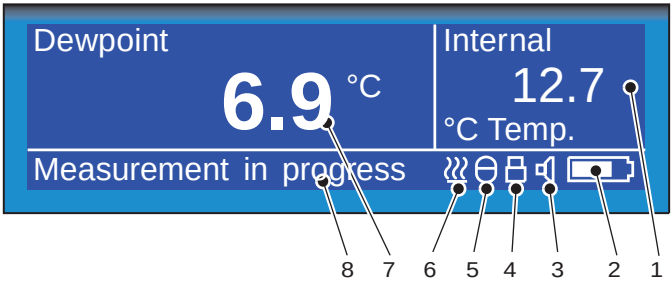

Figure 2.3 *Instrument display*

Item	Description
1	**Secondary display.** Shows reading from external transmitter, if configured: or internal temperature if external transmitter not configured. Internal reading shown in this example shows internal dewpoint if external sensor reading is set as primary display.
2	**Battery charge indicator icon.** Flashes when the battery voltage drops below 4V, indicating that the battery needs charging. A warning beep also sounds when the battery charge level is low. The icon also flashes when the charger is connected.
3	**Keyboard beep indicator.** This icon indicates that the keyboard beep is switched on. The position of the icon in the status line may vary.
4	**Keyboard lock indicator.** This icon indicates that the keyboard is locked. The position of the icon in the status line may vary.
5	**Datalog status indicator.** This icon indicates that logging is enabled and running. The position of the icon in the status line may vary.
6	**Sensor initializing indicator.** This icon indicates that the initialization Process is in progress and that sensor heating is on. The presence of this symbol is accompanied by Initializing internal sensor status message. The position of the icon in the status line may vary.
7	**Primary Display.** Main display (large characters).
8	**Status message display area.** Displays status and error messages.

Table 2.2 Instrument display descriptions

2.4 Instrument Start-Up

When turned on, the instrument goes through an initialization process of between 4 and 7 minutes, depending on the sensor and sample gas characteristics, during which time the internal sensor is heated to a maximum of 140°F (60ºC). The heating process excites the moisture molecules already present in the sensor and accelerates equilibration with the moisture content of the sample gas. During this period the sample gas flow purges the system. After this period, the sensor will be dried to below the dewpoint of the gas to be measured. The heating is then switched off and the display flashes.

Figure 2.4 shows a typical start-up sequence.

When turned on, the System Initializing screen is displayed for a period of approximately five seconds; following which the Initialization screen is displayed for a period of 1 minute. Thereafter the screen will show a countdown time of the remaining initialization time.

During this period, gas will be flowing through the sensor and can be externally regulated to meet the instrument's flow requirements. The real time sensor temperature is indicated in the secondary display area. The Initializing icon (item 6 in *Figure 2.3)* is displayed in the status area. The keyboard, with the exception of the scroll up and scroll down keys, is locked out, as indicated by the keyboard lock icon (item 4 in *Figure 2.3)*, until the initialization period has expired. Note that it is possible to terminate the initialization process before the initialization period has timed out by pressing the scroll up and scroll down keys simultaneously. This action aborts the instrument's response enhancement system but allows the operator to make an immediate measurement if the measured dewpoint is wetter than –4°F (-20ºC) dewpoint.

While the initialization process is in progress, the backlight time-out is precluded and, if any external transmitter has been configured and connected to the instrument, display of the external transmitter reading is also precluded. After the end of the initialization period, the display reverts to the measurement mode displaying the dewpoint (in the currently selected unit) in the primary display area, and any external transmitter reading in the secondary display area. By default, the internal temperature is displayed in the secondary display area if no external transmitter is configured.

When the reading has been acquired, and the instrument has been dynamically tracking it for a given period, a message, **Measurement OK**, indicates that the instrument is stable and reading within 0.9°F (0.5°C) for two minutes.

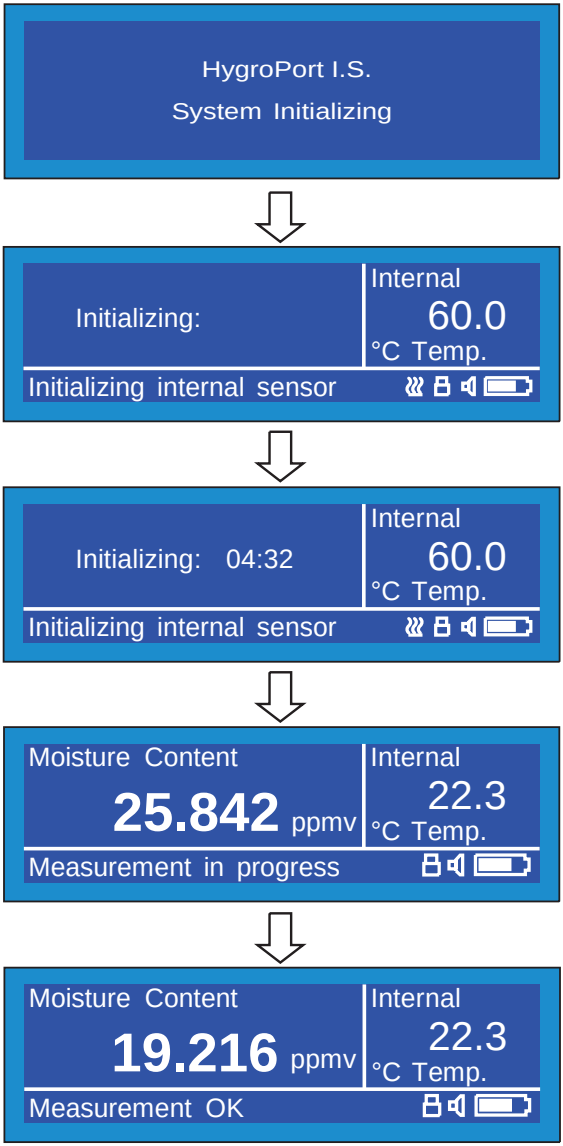

Figure 2.4 *Instrument start-up sequence*

2.4.1 Display Units

The instrument can display the measured reading in a number of different units as follows: °C, °F, K dewpoint and gas temperature; ppm_v and g/kg for air, N_2, H_2, CO_2, SF_6; ppm_v, lb/MMscf and g/m^3 for natural gas, ppm_v, g/m^3, %RH, Moisture Content (ppm_W) and (ppm_v) and Calculated Dewpoint at pressure (°C, °F or K).

To toggle between displayed units, press either the scroll up or scroll down key. *Figure 2.5* illustrates an example showing the method of changing display units from Dewpoint to Absolute Humidity.

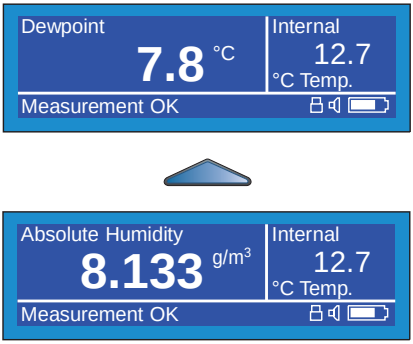

Figure 2.5 *Change display units*

2.5 Main Menu

All instrument settings are made from a top level Settings menu which is accessible from the Main Display. This menu is accessed from the Main Display by pressing the Enter key. On the first occasion after instrument is turned on the passcode entry screen is displayed. The passcode PIN, 7316, must then be entered.

NOTE: After 10 seconds of inactivity, the keyboard is locked. To unlock, press any key.

Figure 2.6 shows the entry sequence. This flowchart and all other flowchartscharts in this handbook should be read from top to bottom and left to right.
With the first digit of the passcode entry screen highlighted in reverse video, enter the first digit (7) by pressing the ▼ (down) key three times. (Pressing the ▲ (up) key seven times would have the same effect.) Press the Enter key to accept this entry and move to the next digit position.

Enter the second digit by pressing the ▲ (up) key three times, to display 3 in reverse video and again press the Enter key to accept the second digit and move the cursor to the third digit position.

Repeat this procedure, following *Figure 2.6*, until all the passcode digits have been entered. On successful entry of the last digit (6), the top level Main Menu is displayed.

If the passcode is incorrectly entered, the passcode screen is displayed, showing the entries that have been made and the input cursor is placed over the first digit. To accept any digit as correct and to step to the next digit position, press the Enter key. Change the incorrect entry, using either the ▲ (up) or ▼ (down) keys and when a correct PIN has been entered, the top level Main Menu will be displayed.

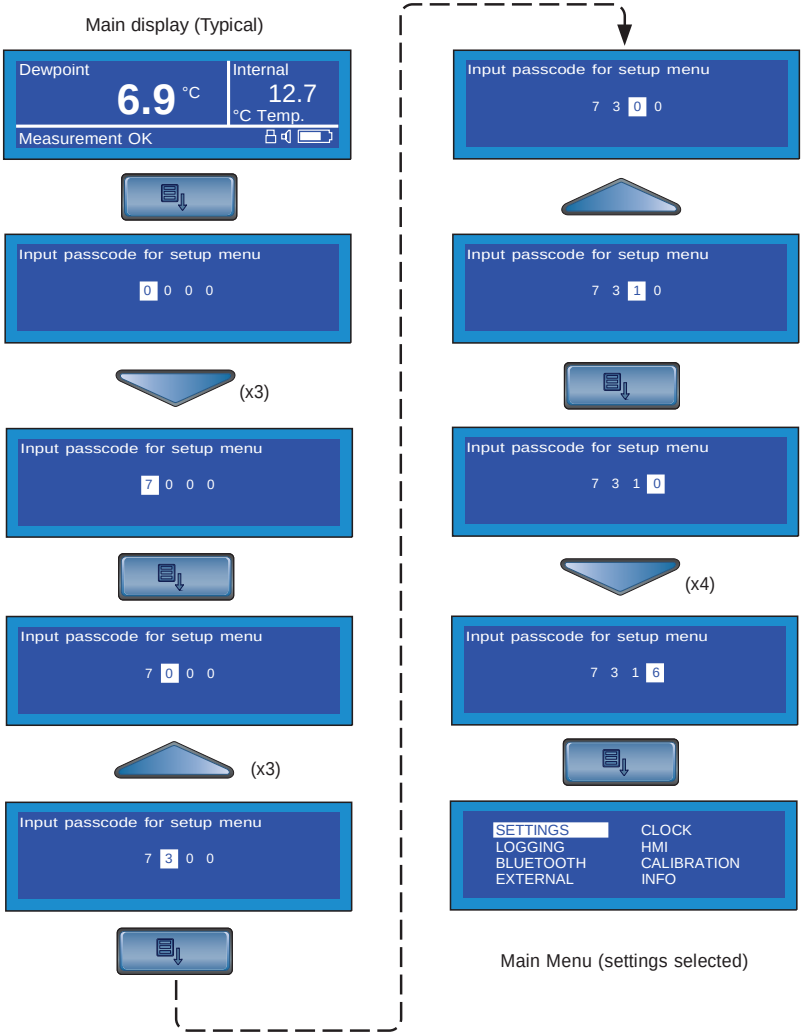

Figure 2.6 *Passcode entry*

2.6 Overall Menu Structure

The HygroPort I.S. instrument has a three level menu structure, the top level of which (Main Menu), is accessed from the Main Display by pressing the Enter key and entering the passcode as detailed in Section 2.5.

Within this Main Menu, eight options are available: SETTINGS, LOGGING, BLUETOOTH, EXTERNAL, CLOCK, HMI, CALIBRATION and INFO. These options are selected by using the scroll up and scroll down keys. As each option is highlighted, it is presented in a reverse video box. Pressing the Enter key provides access to a sub-level menu which permits the variables associated with that option to be edited. The sub-menu associated with each Main Menu option is shown.

Within each group of sub-level menus, the scroll up and scroll down keys are used to highlight each field within the group and the Enter key is used to select the field. Once a field has been selected, the scroll up and scroll down keys are then used to edit the parameter value associated with that field. The new value is then entered by pressing the Enter key.

After accepting a new value, quit the sub-menu by pressing the scroll left key which returns the operator to the Main Menu. From the Main Menu either, select another second level menu, or press the scroll left key again which returns the operator to the passcode entry screen. Pressing the scroll left key again returns to the main display.

The following sections describe the various second level sub-menus.

From the main display, pressing the scroll right key causes the chart to be displayed. The chart interval is set up under the Settings option of the main menu.

Pressing the scroll right key when the chart is displayed will cause either the log files to be displayed (if data logging is not selected), or the Logs page (current data) if logging is selected. If logging is not selected, pressing the Enter key will enable a shortcut to the datalog Set-Up Menu. Where more than one page of data is available, either for log files or log data, the scroll up and scroll down keys are used to scroll through the available list.

To prevent unauthorized correction of the instrument's calibration tables, entry to the calibration menu is protected by an additional passcode PIN. The method of entry is the same as that described in Section 2.5 (see also Figure 2.6), except that a Cal PIN replaces the Settings PIN (refer to Section 7.3).

Within the Calibration routines, automatic recognition of an external Kahn Easidew I.S. transmitter is provided, which causes the relevant calibration table to be displayed (refer to Section 1). The Info page, accessible from the main menu page, provides system information, Firmware Issue No., Serial No., Calibration Due Date and Sensor Hours Run.

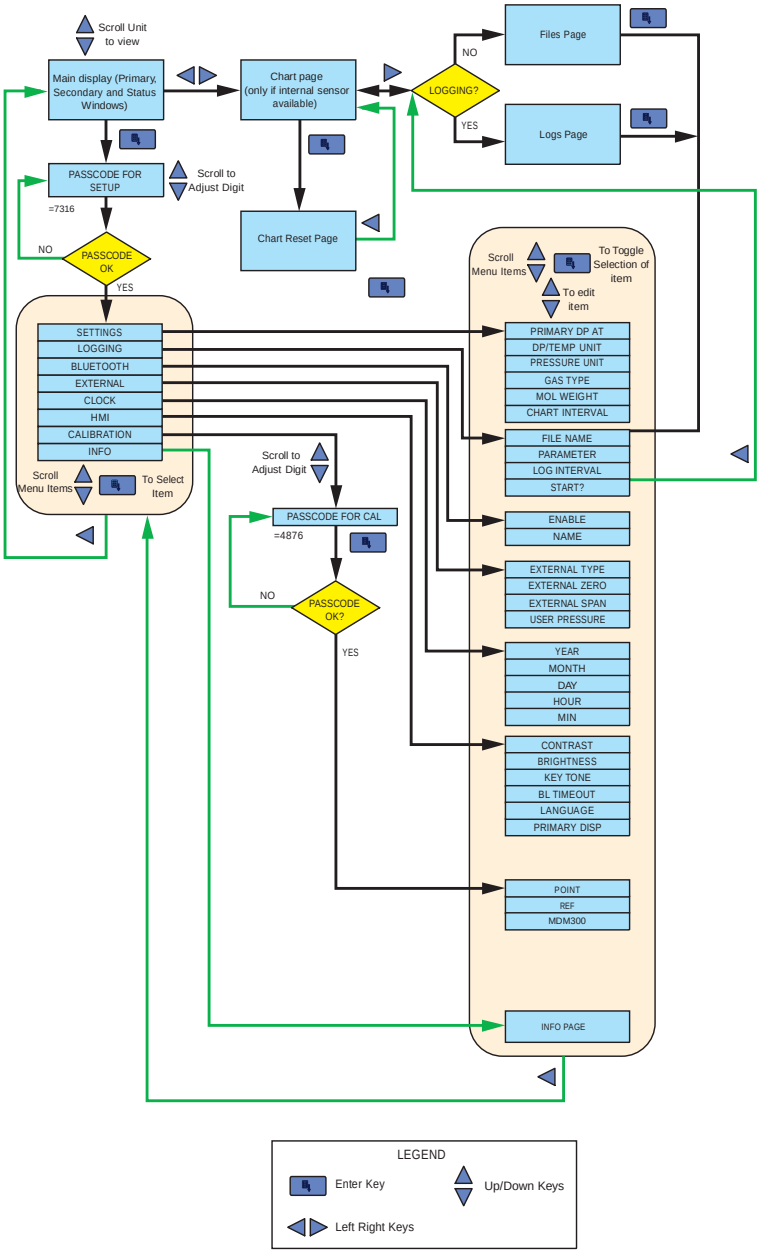

Figure 2.7 *HygroPort I.S. menu structure*

2.6.1 General Settings

When the main menu is first entered, the general SETTINGS option is highlighted in reverse video. This is the general Settings option and the associated menu (Figure 2.8), is displayed by pressing the Enter key.

Initially, the PRIMARY DP AT field is highlighted. This field selects whether the instrument has been set up to take readings at atmospheric pressure or system pressure. To enter the parameter value field, press the Enter key. The current setting, i.e. ATMOS, is then highlighted.

To change this field value, press the Enter key and use either the scroll up or scroll down keys to select the required value and then press the Enter key to accept it. An example of the key sequence for changing the field value from ATMOS to PRESS is shown in Figure 2.8.

To access the other settings, use the scroll up or scroll down keys to select the required parameter, press the Enter key and proceed in a similar manner as described above.

Figure 2.8 *General Settings menu*

Table 2.3 details the field values. To quit, press scroll left key.

Parameter	Parameter variable options
PRIMARY DP AT	ATMOS or PRESS (Atmospheric or Pressure). Indicates if the primary display sensor is at atmospheric or pressure
DP/TEMP UNIT	°C, °F or K (sets system temperature units)
PRESSURE UNIT	psig, bar, KPa, bara, psia, MPa (sets system pressure units)
GAS TYPE	Air, N_2, USER, CO_2, SF_6 (defines the sample gas type) The MOL WEIGHT field is automatically set internally for all gases except USER i.e reads N/A for all gases other than USER. For any other type of sample gas, the molecular weight of the gas must be defined in the MOL WEIGHT field.
MOL WEIGHT	Used to set molecular weight of a user-defined sample gas (Range 1 to 99) Defaults to 1 when field first selected
CHART INTERVAL	Sets chart time interval. Range 1 to 60 sec, default value 5

Table 2.3 General Settings

2.6.2 Logging

Highlight LOGGING from the Main Menu by using a combination of the ▲ (up) and ▼ (down) keys and press the Enter key. The Logging Set-up menu, is then displayed, see Figure 2.9.

Initially the FILE NAME field is highlighted. This field is used to define a name for a new log file and can be any combination of Alphanumeric characters (max 8 digits). NOTE: If a file name is not entered, a logging cycle cannot be started.

To enter the parameter value field press the Enter key. A prompt (-) for the first character is then highlighted. Use a combination of the scroll up and scroll down keys to insert the first character and then the scroll right key to shift to the second character position.

Repeat the above procedure until all characters have been entered and press the Enter key.

Set up the PARAMETER to be logged and the LOG INTERVAL in a similar manner.

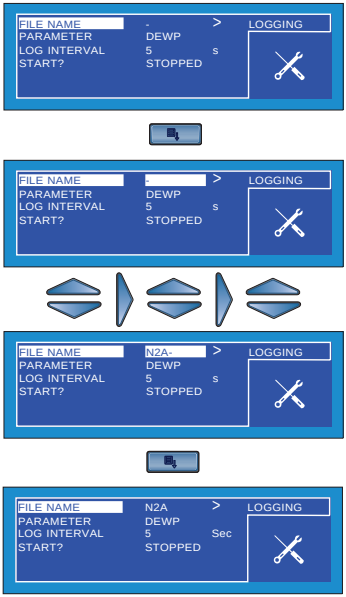

Figure 2.9 *Set-up Logging menu*

After setting up the logging parameters, start the log cycle by selecting START?. Press the Enter key to highlight STOPPED and use the scroll down key to change the field value to STARTED. Press the Enter key to start the logging cycle.

Table 2.4 details the field values. To quit, press the scroll left key.

Parameter	Parameter variable options
FILE NAME	Defines datalog file name. Field width up to eight alpha- numeric characters. Set with the scroll up, scroll down, scroll right and scroll left keys (NOTE: Scroll left ◄ deletes characters)
PARAMETER	Sets parameter to be logged. This need not necessarily be the same as that displayed on the Main Display. Options available, DEWP, GM^3, GKG, RH, PPMW, PPMV, CALC DP
LOG	Sets Log Interval in 5 sec increments. Range 5 to 600 seconds
INTERVAL START ?	Controls datalog Start and Stop functions. Logging cannot be started if a file name has not been defined. Once started, log file parameter felds are locked out and cannot be changed.

Table 2.4 Logging parameter set up

2.6.3 Bluetooth Settings

WARNING: Bluetooth operation is not permitted in hazardous areas.

Highlight BLUETOOTH from the Main Menu by using a combination of scroll up and scroll down keys and press the Enter key. The Bluetooth Set-Up Menu, is then displayed, see Figure 2.10.

Initially the ENABLE field is highlighted. This field is used to turn the Bluetooth function on and off.

To enter the parameter value field press the Enter key. The current field setting, "NO", will now be highlighted.

To enable the Bluetooth function, use the scroll down key to change the field setting to "YES" and press the Enter key.

Figure 2.10 *Bluetooth settings*

Bluetooth is now running. NOTE: A status message *in Bluetooth mode* is now displayed and this screen now remains until the Bluetooth mode is cancelled by pressing the scroll up key.

To change the Instrument's default Bluetooth address for pairing operations (refer to Section 4.7): Before enabling Bluetooth as described above, enter the NAME field using the scroll down key and press the Enter key.

With the NAME field now highlighted, using a combination of the scroll up, scroll down, scroll right and scroll left keys, select each digit position of the name and change to the required value. Press the Enter key when the correct name has been fully entered.

Table 2.5 details the field values. To quit, press the scroll left key.

Parameter	Parameter variable options
ENABLE	Field used to turn the Bluetooth facility on. Press Enter key to select. Select NO or YES with the ▲ (up) or ▼ (down) key, followed by the Enter key
NAME	Used to set up a Bluetooth name (address) for the instrument. Maximum eight alphanumeric characters. Default name set is HygroPort I.S. *To apply a new name: this must be set up before the Bluetooth mode is enabled and the instrument must be re-set*

Table 2.5 Bluetooth settings

2.6.4 External Sensor Interface

ONLY an Easidew I.S. Transmitter should be connected if the HygroPort I.S. is to be used in a hazardous area. The Easidew I.S. must be connected using the I.S. barriers required by CE-ATEX, FM, or CSA certification. A Kahn Remote Sensor Interface module is also required.

Highlight EXTERNAL from the Main Menu by using a combination of the scroll up and scroll down keys and press the Enter key. The External Set-Up Menu, is then displayed, see Figure 2.11.

Initially the EXTERNAL TYPE field is highlighted. This field is used to select a Kahn Easidew I.S. Transmitter.

To enter the parameter value field press the Enter key. The current setting i.e. NONE, is then highlighted and can be changed. Use either the scroll up or scroll down keys to select EASIDEW and then press the Enter key.

Figure 2.11 illustrates the selection of an Easidew I.S. transmitter. NOTE: The ZERO and SPAN limits are automatically added for this transmitter.

Use the scroll up and scroll down keys to select each parameter that needs to be entered in turn and press the Enter key.

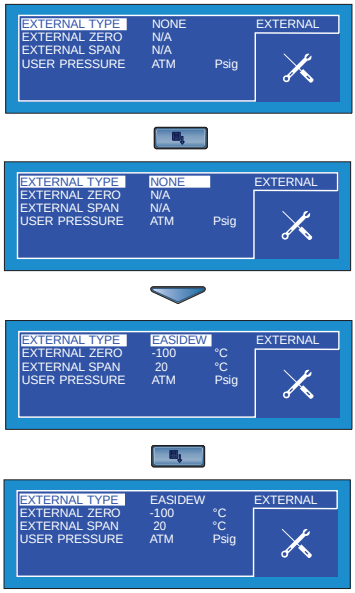

Figure 2.11 *External transmitter*

A user pressure can also be selected. This pressure is used in the calculation of dew point at pressure, moisture content and absolute humidity. If a user pressure is not selected then HygroPort I.S. assumes atmospheric pressure.

Table 2.6 details the field values. To quit, press the scroll left key.

Parameter	Parameter variable options
EXTERNAL TYPE	Defines use of Easidew I.S. transmitter. ZERO and SPAN (fullscale) default limits are pre-programmed but can be redefined
EXTERNAL ZERO	Defines external zero (lower limit). The ZERO default limit is pre-programmed but can be redefined
EXTERNAL SPAN	Defines external span (upper limit). The SPAN (full scale) default limit is pre-programmed but can be redefined
USER PRESSURE	Range 0-5000 psig (or equivalent in other units). Used to define system pressure, for use in calculating moisture parameters

Table 2.6 External transmitter selection

2.6.5 Real Time Clock Settings

Highlight CLOCK from the Main Menu by using a combination of the scroll up and scroll down keys and press the Enter key. The Clock Set-Up Menu is then displayed, see Figure 2.12.

Initially the YEAR parameter of the instrument's real time clock is highlighted and the current year is displayed in 2 digit format, i.e. "11" for 2011.

To select any other parameter field, use either the scroll up or scroll down keys to highlight the required parameter and then press the Enter key to enter the value field for that parameter e.g. HOUR.

The current setting e.g. 09, is then highlighted and can be changed by using either the scroll up or scroll down keys. Holding either key will cause the value to continually increase or decrease. Press the Enter key to accept the value.

Figure 2.12 illustrates a typical real time clock set-up screen and shows the selection and changing of the HOUR parameter from 9:32 to 10:32.

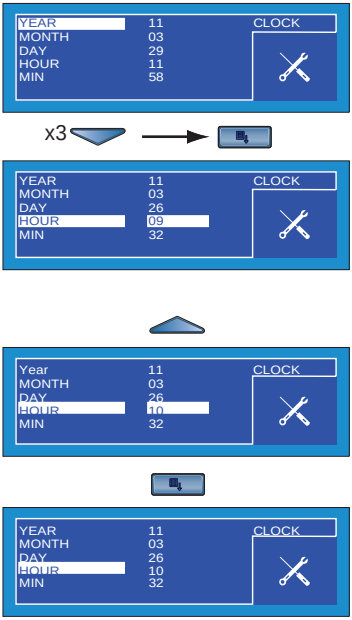

Figure 2.12 *Real time clock settings*

Table 2.7 details the field values. To quit, press the scroll left key.

Parameter	Parameter variable options
YEAR	**Range 00 to 99.** Scroll value with the scroll up or scroll down keys, accept value with the Enter key.
MONTH	**Range 01 to 12.** Scroll value with the scroll up or scroll down keys, accept value with the Enter key.
DAY	**Range 01 to 31.** Scroll value with the scroll up or scroll down keys, accept value with the Enter key.
HOUR	**Range 00 to 23.** Scroll value with the scroll up or scroll down keys, accept value with the Enter key.
MIN	**Range 00 to 59.** Scroll value with the scroll up or scroll down keys, accept value with the Enter key.

Table 2.7 Real time clock settings

2.6.6 HMI Settings

To enter the HMI menu, highlight HMI from the Main Menu by using a combination of the scroll up and scroll down keys and press the Enter key. The HMI Set-Up Menu is then displayed, see Figure 2.13.

Initially the CONTRAST parameter is highlighted and the current setting, e.g. 50%, is displayed.

To select any of the other parameter fields, use either the scroll up or scroll down keys to highlight the required parameter and then press the Enter key to enter the value field for that parameter i.e. PRIMARY DISP. NOTE: This option is only accessible if an external transmitter has been configured.

The current setting i.e. INTERN is then highlighted and can be changed by using either the scroll up or scroll down keys.
Press the Enter key to accept the value.

Figure 2.13 shows an HMI set-up screen and the method of changing the primary display to show the output of either the internal sensor (INTERN) or the external transmitter (EXTERN).

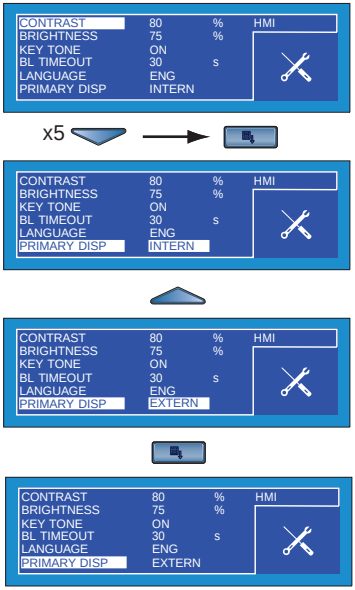

Figure 2.13 *HMI settings*

Table 2.8 details the field values. To quit, press the scroll left key.

Parameter	Parameter variable options
CONTRAST	**0 to 100% in 5% increments.** Scroll value with the scroll up or ▼ (down) keys, accept the selection with the Enter key.
BRIGHTNESS	**0 to 100% in 5% increments.** Scroll value with the scroll up or scroll down keys, accept the selection with the Enter key.
KEY TONE	**ON, OFF.** Toggle with the scroll up or scroll down keys, accept The selection with the Enter key.
BL TIME-OUT (Backlight control)	**OFF, 15 to 60 sec** in 15 sec increments**.** Scroll value using the scroll up or down keys, accept the selection with the Enter key.
LANGUAGE	**ENG, DEU, ESP, FRA, ITA, POR** Select with the scroll up or scroll down keys, accept the selection with the Enter key.
PRIMARY DISP	**INTERN, EXTERN.** Set with the scroll up or scroll down keys, accept the selection with the Enter key.

Table 2.8 HMI settings

2.6.7 Calibration

To enter the Calibration Menu, highlight CALIBRATION from the Main Menu by using a combination of the scroll up and scroll down keys and press the Enter key.

Entry to the Calibration Menu is protected by a PIN. The PIN (4876) is entered in a similar manner to that described in Section 2.5. Section 7 details the use of the calibration routines.

WARNING: ***These procedures require the use of specialized test equipment and calibration adjustments should only be carried out by qualified personnel.***

Figure 2.14 shows the calibration screen for HygroPort I.S. calibration correction.

This screen gives access to the selected sensor's calibration look-up table and provides the facility to select and change any single point, or number of points, by means of the scroll up, scroll down, scroll right and scroll left keys. After all the changes within the look-up table have been made, they are accepted by pressing the Enter key.

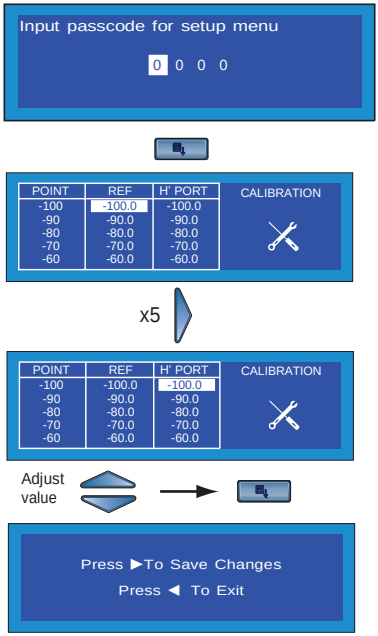

Figure 2.14 *Calibration*

No changes are then implemented until the scroll right key is pressed at the Exit screen. To exit without implementing any changes, use the scroll left key.

2.6.8 Info

To enter the Information menu, highlight INFO from the Main Menu by using a combination of the scroll up and scroll down keys and press the Enter key.

This screen contains system information and no changes can be made.

To exit the screen, press the scroll left key.

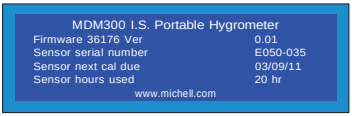

Figure 2.15 *Info screen*

2.6.9 Chart Options

A chart displaying a graph of the value of the selected internal sensor parameter with respect to time may be obtained by pressing the scroll right key from the Main menu. No chart can be displayed if the internal transmitter is not available.

Figure 2.16 shows a typical chart plot.

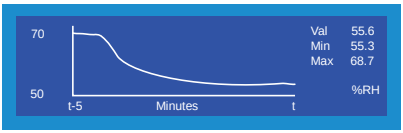

Figure 2.16 Typical chart plot

The X-axis (time) has a default range of 5 min and the graph is incremented (drawn) at the interval set up under SETTINGS (see Section 2.6.1). The Y-axis shows the measured value, with respect to time.

The current, maximum and minimum values of the displayed parameter are shown to the right of the plot and the units of the selected parameter are displayed below these readings.

The chart can be re-set at any time by pressing the Enter key.

This provides options to either re-set the chart by pressing the scroll right key or to return to the chart, without re-setting, by pressing the scroll left key.

A typical key sequence is shown in Figure 2.17.

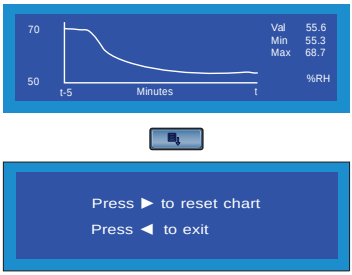

Figure 2.17 Re-set chart

If the instrument is not logging, pressing the scroll right key, while the chart is displayed, provides a list of all the previously saved log files, together with an indication of the available memory capacity (see Figure 2.18). To scroll through the list, use the scroll up and scroll down keys as required.

The content of the datalog files cannot be examined but, by enabling the instrument's Bluetooth mode, (see Section 2.6.3), the HygroPort I.S. application files may be used to upload the datalog files to a PC.

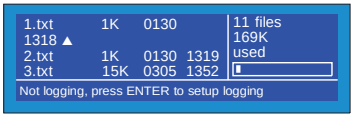

Figure 2.18 Datalog file list

While in the datalog file list screen, a shortcut to the LOGGING Set-Up Menu is provided by pressing the Enter key. Refer to Section 2.6.2 for Logging set up details.

When the chart is displayed, and the instrument is in the logging mode, if the scroll right key is pressed, the current log file is displayed (see Figure 2.19).

The scroll up and scroll down keys are both active while the log file is being displayed. To view log points taken earlier in the logging cycle, press the scroll up key. To continuously scroll back, hold the key down.

Similarly, to move forward in the list press the scroll down key, once for a single step, or press and hold to continuously scroll forward.

#	INT	EXT	ST
106	26.8	100.0	0028
107	26.2	-90.0	0028
108	25.9	-80.0	0028
109	25.8	-70.0	0028
110	25.5	-60.0	0028

File	CR270309
INT	RH
EXT.	EXT_DP
INTVAL	05 Sec
D#	090327
T#	123606

Figure 2.19 Current log file

The display reports the file name, i.e. CR270309; the primary (INT) display parameter that is being logged, i.e. RH; the secondary display (EXT) being logged, i.e. EXT_DP; and the logging interval, i.e. 05 Sec.

Additionally, the current date D#, in YYMMDD format (090327), and time T#, in HHMMSS format, (123606) are also displayed. NOTE: The chart and datalogging are independent functions; therefore the parameter displayed on the chart may not necessarily reflect what is being logged.

The number sign (#) column indicates a log number for each set of log points - log points 106 to 110 being shown in this example.

The ST column is a status column which reports the status of the instrument at each log point in hexadecimal code. The status codes are explained in Appendix C.

To return to the chart, press the scroll left key.

3 SET UP

3.1 Safety

Only qualified personnel should be permitted to connect the HygroPort I.S. electrically and mechanically to the sample gas.

3.2 Unpacking the Instrument

The HygroPort I.S. instrument is packed into a standard box and the method of unpacking is shown in Figure 3.1.

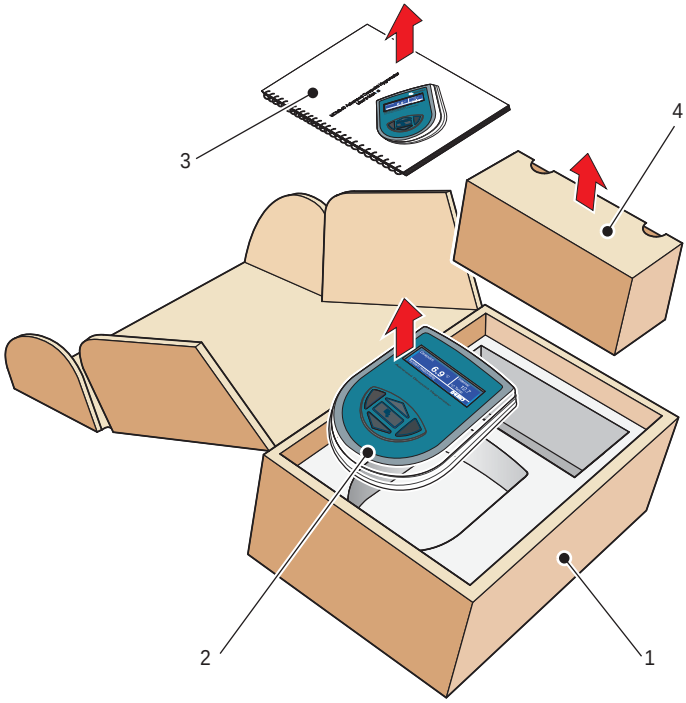

Figure 3.1 *Packing method*

Open the box (1) and unpack carefully. Remove the HygroPort I.S. instrument (2), the User's Manual (3) and the accessories box (4).

Save all the packing materials for the purpose of returning the instrument for re-calibration or any warranty claims.

3.3 HygroPort I.S. Accessories

The accessories for the HygroPort I.S. are shown in Figure 3.3. Items 1 to 6 are supplied as standard and item 7 is optional . Please check that all the standard components are present after unpacking. Report any shortages immediately.

1. Calibration Certificate
2. User's Manual
3. Charger Unit (North American charger plug adapter shown installed)
4. Gas Input/Output Port Adaptor (three provided – two installed on the instrument)
5. Application Software CD
6. Quick-Start Guide
7. Carrying Case - made from anti-static materials suitable for use in hazardous areas (optional)
8. 2.5 mm Allen Key (not shown)

Three gas input port adaptors (item 4) are provided, two with a large orifice and one with a small orifice. Depending upon confguration, this permits the instrument to be run at either system pressure or atmospheric pressure and facilitates the connection of external flow monitoring and control.

The accessory pack contains a large orifice adaptor. The remaining adaptors are inserted into the instrument's gas ports (1 and 2) as shown in *Figure 3.2.*

NOTE: On delivery two large orifice adaptors are installed on the instrument. One small orifice adaptor is provided as a loose spare (see Section 3.5).

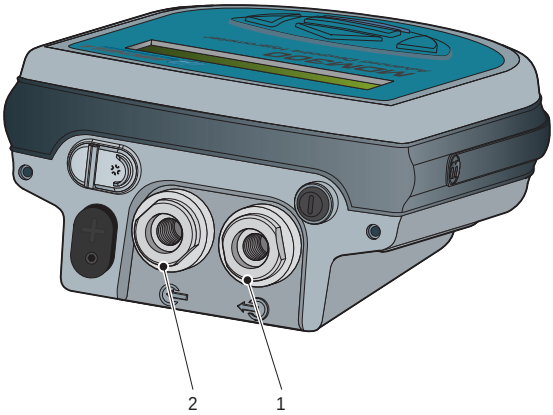

Figure 3.2 *Gas port adaptors*

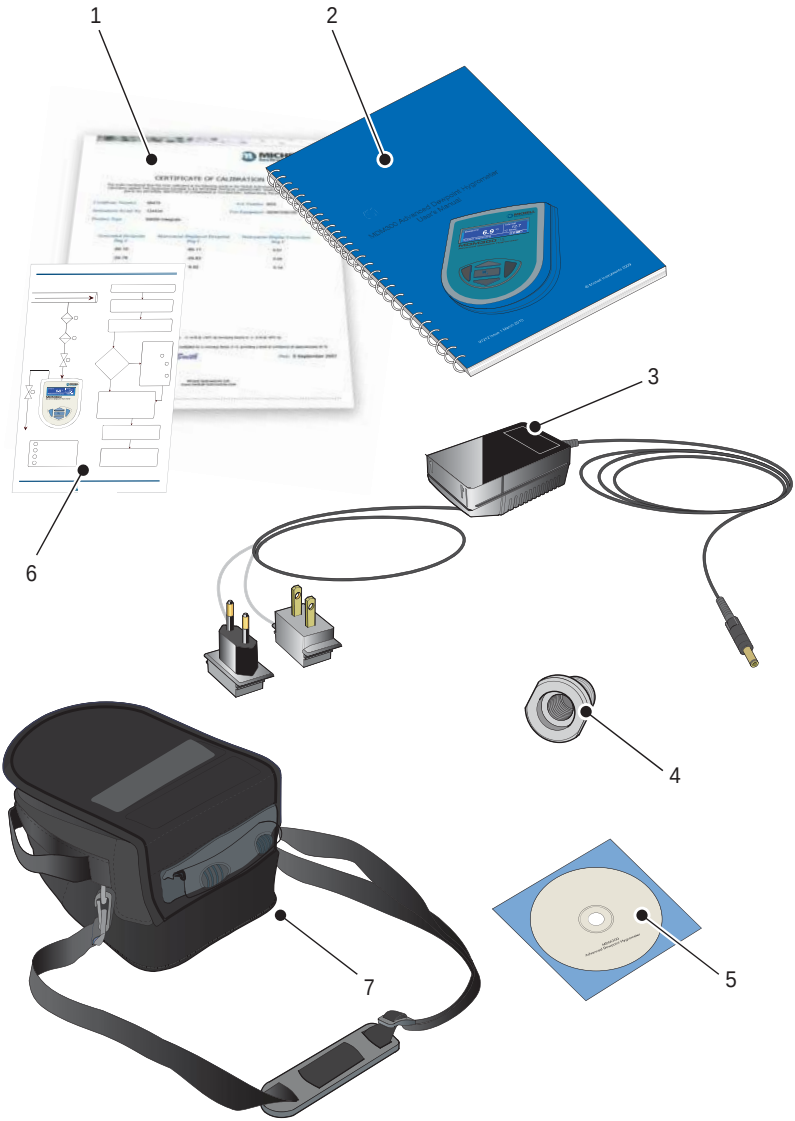

Figure 3.3 Accessories

3.4 Operational Requirements

Operational requirements are as follows:

Sample gas flow rate:	0.4 to 1.0 scfh
Operating pressure:	0 to 5000 psig

3.4.1 Environmental Requirements – HygroPort I.S. Instrument

Operating temperature range:	-4 to +122°F (-20 to +50°C)
Humidity:	0 to 100% RH (non-condensing)
Altitude:	Up to 6562 ft (2000m)

3.4.2 Charger Electrical Requirements

Charger supply voltage:	100 V to 240 V AC (+10%, -15%) 50 to 60Hz (±5%), 8 VA

3.5 Instrument Gas Connections (Figures 3.2 and 3.4)

POSSIBLE INJURY! The tubing, valves and other apparatus attached to this instrument must be adequate for the maximum pressure which will be applied, otherwise physical injury to the operator or bystander is possible.

Sample gas connections are made via the Gas In (2) and Gas Out (1) ports located on the rear of the instrument as shown in *Figure 3.2*.

The HygroPort I.S. is supplied with a sintered disc filter installed in the Gas In port, and with a large bore orifice fitting installed in each of the gas ports. These fittings have an 1/8" NPT female thread to allow the user to connect other components of their choice. A range of available fittings and sample flow accessories are shown in Figure 3.4.

Atmospheric pressure or system pressure dewpoint can be measured depending on the configuration of the orifice fittings shown in Table 3.1.

For gas pressures outside the range 15-150 psig (1 to 10 bar), the instrument requires external flow control components, as shown in Figure 3.4.

Dew point at	Gas Inlet port fitting	Gas Outlet port fitting	Sample gas pressure
Atmospheric	Small bore orifice	Large bore orifice	15-150 psig (1 to 10 bar)
System	Large bore orifice	Small bore orifice	15-150 psig (1 to 10 bar)
Either (using other flow control components)	Large bore orifice	Large bore orifice	0-5000 psig (0-350 bar)

Table 3.1 Adaptor fittings

3.5.1

!

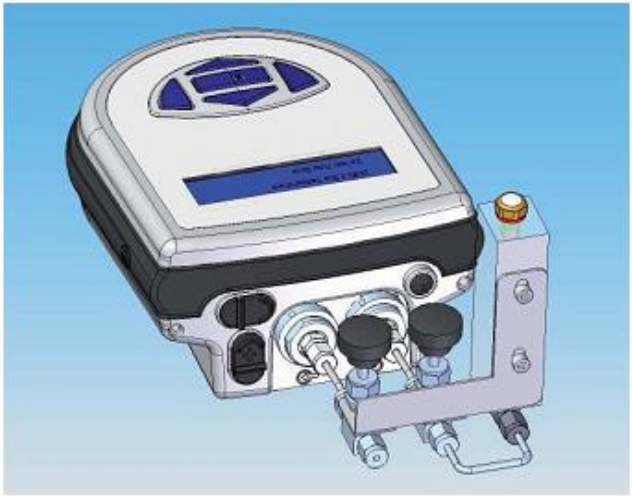

Figure 3.4 *Gas coupling examples for atmospheric pressure measurement*

NOTE: The application kit shown in Figure 3.4 (excluding the orifice fittings) is not supplied as standard, but is part of a range of kits which can be ordered from Kahn Instruments, on request.

3.7 Connect Battery Charger

WARNING: The battery charger must NOT be connected within the hazardous area. The battery charger socket cover MUST be installed when the product is in use in a hazardous area.

The HygroPort I.S. is powered from a 4.8 V, internally mounted, rechargeable Nickel Metal Hydride (NiMH) battery. Typically, depending upon the instrument settings, the battery will provide approximately 24 hours of continuous operation when fully charged.

A graphical display of battery charge state is provided and an audible warning is given as the battery approaches full discharge. **NOTE: Do not allow the battery to fully discharge: doing so may result in difficulty with recharging**.

Loosen the securing screw using the supplied allen screw and swing aside the sealing cover (2). Insert the battery charger connector (1) into the charger connector as shown in Figure 3.8.

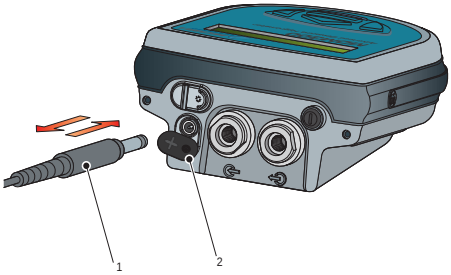

Figure 3.8 *Connect battery charger*

Connect an AC power supply, 110-240 V, 47-63 Hz, to the battery charger unit.

NOTE: The HygroPort I.S. instrument does not need to be switched on in order to charge the battery.

The battery charger supplied is a "Smart" charger.

WARNING: Only use the charger supplied with the HygroPort I.S. The use of any charger other than that supplied with the HygroPort I.S. will invalidate the product warranty.

When initially connected, a charge indicator LED, located on the top of the charger, slowly flashes yellow, indicating that the charger has entered a pre-charge cycle.

After a short period this indicator starts to rapidly flash green, indicating that a fast charge cycle (approximately 2 hours), is now in progress. As the battery approaches full charge, the LED starts to flash green, more slowly, indicating that a "topping-off" charge is now, being applied.

At the end of the topping-off charge, the charge indicator LED assumes a steady green state, indicating that the battery charge cycle is now complete. Turn off the AC power supply, remove the charger unit and close the instrument's charge connector protection cover.

A battery that has been discharged to the point of audible warning will be 50% charged after 30 minutes or fully charged after approximately 2 hours.

Upon completion of charging, reposition the sealing cover and tighten the retaining screw.

4 OPERATION

High pressure gases are potentially dangerous.
Please see the warning in Section 3.5.1

4.1 Preparation for Operation

Before operation it is recommended that the user become familiar with Section 2 of this Manual in which all the equipment controls and indicators, the elements of the display and the overall menu structure are described.

Prior to making a measurement, the instrument must be connected to a sample gas stream as described in Section 3.5.

It is also recommended that the battery be charged before conducting any tests (refer to Section 3.7).

Do not allow the battery to fully discharge. Doing so may result in difficulty recharging again.

The instrument will also have been set up with a number of factory default parameters. These default parameters are shown in Table 4.1, together with a reference to the relevant part of Section 2, which details the method of changing these default values.

4.2 General Operational Information

The instrument is designed to operate in a flowing gas stream of between 0.4 and 1.0 scfh (0.2 and 0.5 Nl/min) and at system pressures ranging from atmospheric up to 5000 psi (350 bar). Section 3.5 describes typical methods of connecting the instrument to a sample gas stream.

For all applications, the sample gas is taken into the instrument via the Gas In port, located on the top of the instrument, from where it passes through the internal sensor and out via the Gas Out port. Gas flow rate (if monitored) is normally measured externally, on the output side of the instrument.

The sample gas flow rate is not controlled or measured within the instrument. It must be controlled outside the instrument, typically by means of either fixed orifice fittings, or a needle valve. Kahn Instruments provides an optional range of accessories, specifically designed for use with the HygroPort I.S.

Parameter	Default Value	Associated Section Reference
SETTINGS		Section 2.6.1, *Figure 2.8*
PRIMARY DP AT	ATMOS	
DP/TEMP UNIT	°C	
PRESS UNIT	psi	
GAS TYPE	AIR	
MOL WEIGHT	N/A	
CHART INTERVAL	5 sec	
LOGGING		Section 2.6.2, *Figure 2.9*
FILE NAME	-	
PARAMETER	DEWP	
LOG INTERVAL	5 sec	
START?	STOPPED	
BLUETOOTH		Section 2.6.3, *Figure 2.10*
ENABLE	NO	
NAME	HygroPort	
EXTERNAL		Section 2.6.4, *Figure 2.11*
EXTERNAL TYPE	NONE	
EXTERNAL ZERO	N/A	
EXTERNAL SPAN	N/A	
CLOCK	Current time & date	Section 2.6.5, *Figure 2.12*
HMI		Section 2.6.6, *Figure 2.13*
CONTRAST	80%	
BRIGHTNESS	40%	
KEYTONE	OFF	
BL TIME-OUT	15 sec	
LANGUAGE	ENG	
PRIMARY DISP	INTERN	
CALIBRATION & INFO	Default values not applicable	Sections 2.6.7 & 2.6.8 *Figure 2.14 & 2.15*

Table 4.1 HygroPort I.S. default parameters

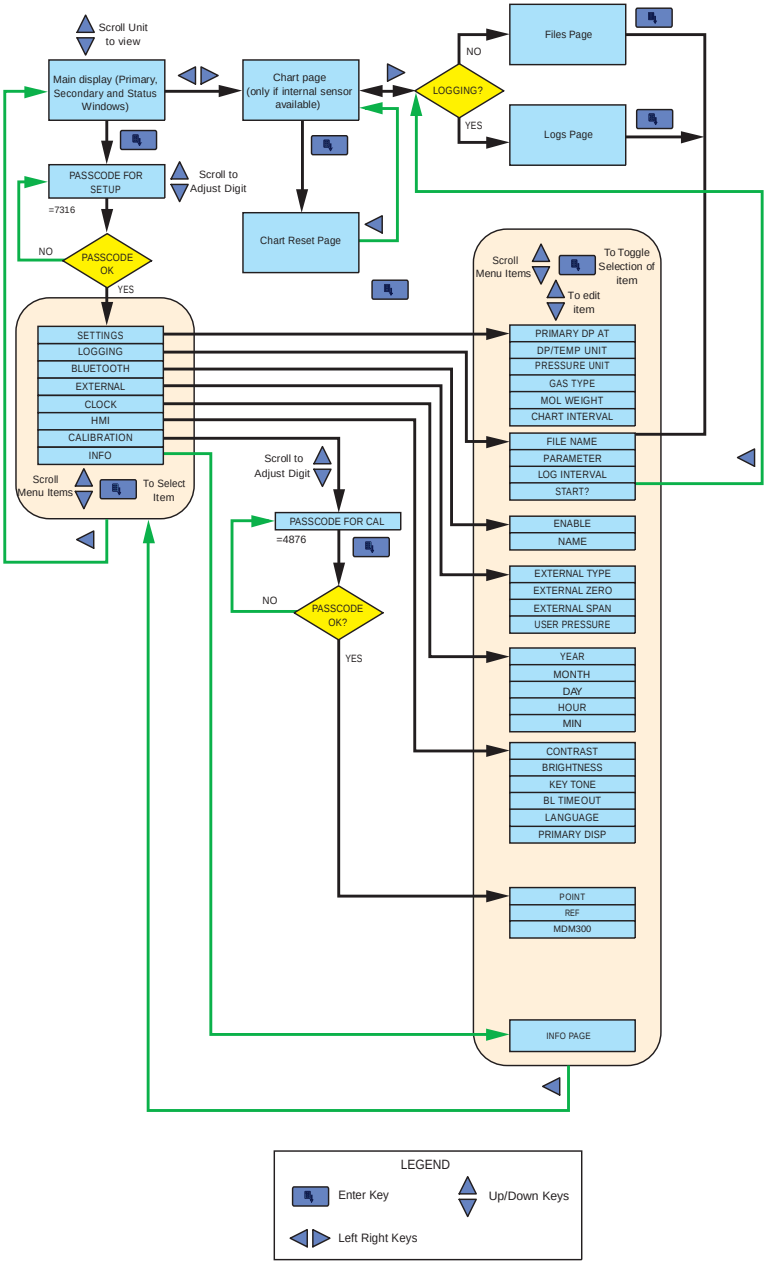

Figure 4.1 HygroPort I.S. menu structure

4.3 Operation Guide

Operating the HygroPort I.S at atmospheric pressure:

1. Connect the HygroPort I.S. to the sample gas stream, typically as shown in Section 3.5.
2. Use the inlet flow control valve to adjust the flow rate through the instrument to between 0.4 and 1.0 scfh (0.2 and 0.5 Nl/min).
3. Turn the instrument on using the rear mounted ON/OFF switch (item 3 in *Figure 2.1).* The instrument display will now illuminate, initially showing the start-up screen, followed by the initialization screen (see *Figure 4.2)*.
4. A 1 minute initialization period commences automatically, after which the screen will show a countdown of the remaining initialization time. During this period the sensor is heated to increase the mobility of water molecules and accelerate equilibrium with the passing sample gas. The status display will read Initializing internal sensor.
5. The instrument will then begin Measurement mode. During the first few minutes of Measurement mode it is normal to see the displayed moisture value drop rapidly below (undershoot) the actual moisture value, before returning to a stable reading.
6. The instrument display will show an initial measured value and provide a visual indication that the sensor is, at first, responding to the sample (status display shows Measurement in Progress), and a short time later, is measuring the true moisture value (status display shows Measurement OK).
7. Once the instrument's status display indicates Measurement OK, the displayed value represents the true measured value of the sample.

Operating the HygroPort I.S. at sample pressure:

1. Connect the HygroPort I.S. to the sample gas stream, typically as shown in Section 3.5.
2. Insure that the battery has been fully charged (refer to Section 3.7).
3. Use the outlet flow control valve to adjust the flow rate through the instrument to between 0.4 and 1.0 scfh (0.2 and 0.5 Nl/min).
4. Turn the instrument on using the rear mounted ON/OFF switch (item 3 in *Figure 2.1).* The instrument display will now illuminate, initially showing the start-up screen, followed by the initialization screen (see *Figure 4.2).*

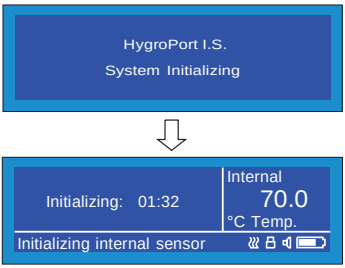

Figure 4.2 Initialization mode

5. A 1 minute initialization period begins automatically, after which the screen will show a countdown of the remaining initialization time. During this period the sensor is heated to to increase the mobility of water molecules and reduce the time taken to reach equilibrium with the passing sample gas. The status display will read Initializing internal sensor.

6. After the initialization period of between 4 to 7 minutes is complete, close the outlet flow control valve and open the inlet flow control valve. Then set the outlet flow control valve to provide a flow rate through the instrument of between 0.4 and 1.0 scfh (0.2 and 0.5 Nl/min).

7. After this, the instrument will commence Measurement mode. During the first few minutes of Measurement mode it is normal to see the displayed moisture value drop rapidly below (undershoot) the actual moisture value, before returning to a stable reading.

8. The instrument display will show an initial measured value and provide a visual indication that the sensor is, at first, responding to the sample (status display shows Measurement in Progress), and a short time later, is measuring the true moisture value (status display shows Measurement OK).

9. Once the instrument's status display indicates Measurement OK, the displayed value represents the true measured value of the sample.

10. At the end of the initialization period, the instrument's menu structure can be entered, allowing the display parameters to be changed, datalogging to be set up and the Bluetooth mode to be enabled (refer to Sections 2.6.2 and 2.6.3).

Refer also to the Quick Start Guide for information on correct operation practice.

4.4 Graphics Display

While the primary display is indicating internal sensor parameters a graphical display of the output can be obtained by pressing the scroll right key. An example of a chart is shown in Figure 4.3. **NOTE: If an external transmitter has been configured, the chart will display the internal dewpoint.**

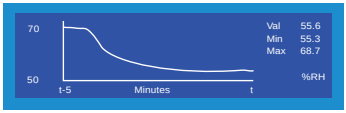

Figure 4.3 Typical chart display

The chart can be re-set at any time by pressing the Enter key followed by the scroll right key.

Section 2.6.9 describes the chart options.

4.4.1 Display Datalog File List

Provided the instrument is not logging, the Datalog File List displays a complete list of all the currently stored datalog files, together with the amount of memory space available, by pressing the scroll right key when the chart is displayed. An example is shown in Figure 4.4.

Figure 4.4 Datalog file list

The current page of files is shown. If they are visible, the ▲ and ▼ arrows located to the right of the files display, indicate that a previous (▲) page and a following (▼) page are available for selection via the scroll up and scroll down keys.

To return to the chart press the scroll left key. To set up a new datalog file press the Enter key.

Datalog files can be uploaded to a PC via a dedicated HygroPort I.S. application software package by first enabling the instrument's Bluetooth facility and pairing it with a PC which has the software application package installed (refer to Section 4.7).

4.4.2 Display Current Datalog File

To display the current log file, while the instrument is logging, press the ▶ (right) key when the chart is displayed. A typical log file is shown in *Figure 4.5*.

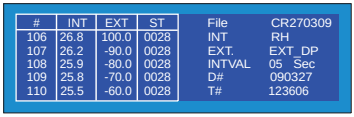

Figure 4.5 Typical log file display

The current page of the log file is shown. Log files start at 1. To view log plots earlier or later than the currently displayed page use the scroll up and scroll down keys.

To return to the chart, press the scroll left key. Section 2.6.9 gives further details.

4.5 Logging

Logging can be set up either from the Logging Menu or from the Chart option (see Section 4.4.1). Both methods of entry lead to the same set-up menu as shown in *Figure 4.6*.

Figure 4.6 Logging set-up menu

To set up a log file the general procedure is as follows (Section 2.6.2 details the full procedure):

1. Enter a file name.
2. Enter the name of the parameter that requires logging. **NOTE: This need not necessarily be the same as that in the primary display (or chart)**
3. Enter the log interval (5 to 600 seconds in 5 second increments).
4. Start the log file by entering the START? field, selecting STARTED with the scroll down key, and pressing the Enter key.

After the log file has been started, quit the LOGGING option by pressing the scroll left key and return to a required previous screen, e.g. pressing three times returns to the Main menu with the Logging display icon in the status line.

4.6 Bluetooth Mode

WARNING: Bluetooth operation is not permitted in hazardous areas.

Bluetooth mode is used, in conjunction with a dedicated HygroPort I.S. application software package, for the purpose of uploading datalog files to a PC using a wireless connection. Within the PC the dedicated Kahn application software package is used to upload the files to the PC's desktop, from where they can be loaded into other programs, e.g. Microsoft Excel®, for further examination and processing.

The Bluetooth Set-up menu is entered from the BLUETOOTH Menu and is shown in Figure 4.7.

Figure 4.7 Bluetooth set-up menu

The general set-up procedure is as follows (refer to Section 2.6.3):

1. Enter an instrument name. Initially, when the instrument is delivered, a name will have been allocated (i.e. HygroPort-AK2). **NOTE: If the name requires changing, do so before enabling the Bluetooth mode.**

2. Enable Bluetooth mode by changing the ENABLE field from NO to YES with the scroll down key and pressing the Enter key.

The instrument is now in Bluetooth mode. NOTE: When the instrument is in Bluetooth mode the Bluetooth screen remains displayed and no other menu options can be selected.

To quit the Bluetooth mode change the ENABLE field from YES to NO with the scroll up key and press the Enter key. Return to the Main menu by pressing the scroll left key twice.

4.6.1 Bluetooth Pairing Procedure

When the instrument is in Bluetooth mode, a pairing procedure needs to be carried out in order for the PC system to recognize the instrument. This procedure only needs to be carried out once for each instrument. A typical pairing procedure is outlined in *Figure 4.8.* The procedure is as follows:

1. From the PC's Bluetooth menu, search for devices in range. This yields the instrument named, i.e. HygroPort-AK2.

2. Double click the instrument icon and enter the instrument's pairing passkey (7316) for all HygroPort I.S. instruments. **NOTE: Each digit will be shown only briefly as it is entered and then hidden.**

3. When all digits have been entered click Next.

4. With the serial link established, click Configure. **NOTE: The name of the COM port allocated, i.e. COM7, will need to be entered when starting the Kahn application software.**

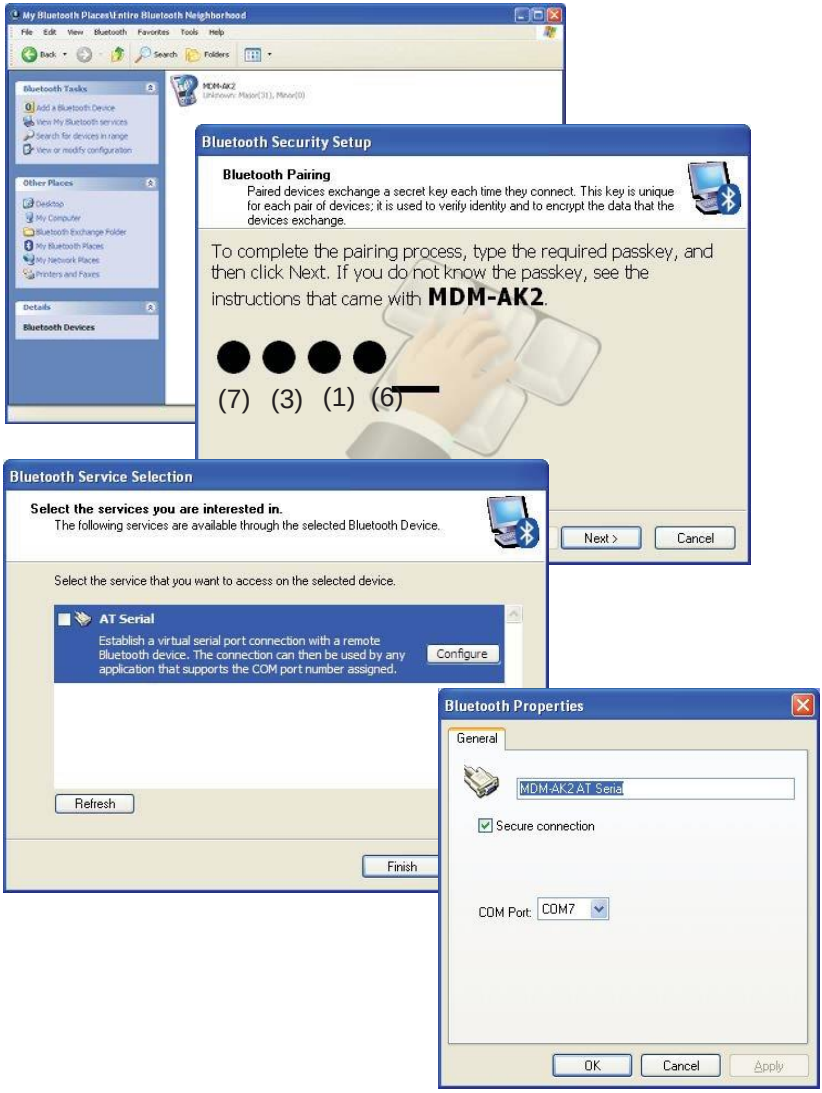

Figure 4.8 Typical Bluetooth pairing sequence

5 APPLICATION SOFTWARE

Application software for the HygroPort I.S. is supplied on a CD.

To install on a PC: place the CD in the CD drive and follow the instructions in the application set-up wizard. If the CD does not auto-run, double-click the application set-up file on the CD. The following authorization code will be required during the installation process: MDM-300-7392

Once the software has been installed and run, the HygroPort I.S. can be linked to the PC by activating the Bluetooth (see Section 4.6 for details).

The application software allows modification of all the instrument parameters from the connected PC. The settings currently stored on the HygroPort I.S. can be downloaded to the PC by clicking the 'Download from HygroPort I.S.' button, and can then be changed and stored by clicking the 'Upload to HygroPort I.S' button.

It also gives access to all logging files stored on the instrument's internal memory. These can be downloaded to a specific location by right clicking, and selecting 'download'.

A context sensitive help file provides further details on the use of the application software.

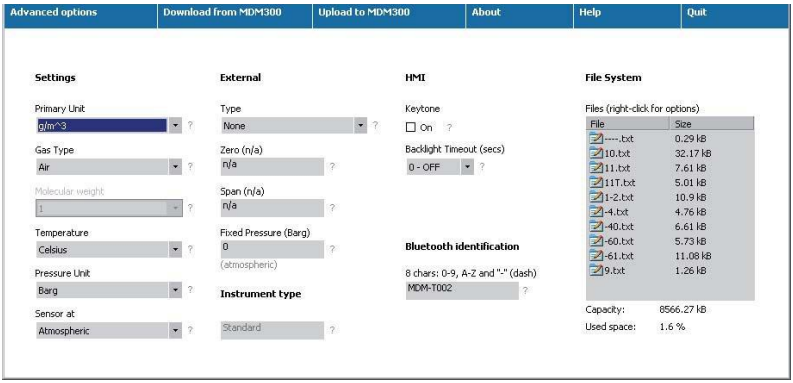

Figure 5.1 Typical application software screen

6 GOOD MEASUREMENT PRACTICE

The HygroPort I.S. is designed to operate in a flowing gas stream with flow rates between 0.4 and 1.0 scfh (0.2 and 0.5 Nl/min). Flow regulation is provided with the HygroPort I.S. instrument up to a 10 barg limit. Beyond this the sample flow must be regulated outside the unit.

There are a number of options for sample conditioning including a specifically designed sampling system and a variety of application kits. The flow rate can be regulated on the inlet or outlet depending on whether the intention is to measure at atmospheric or sample pressure. Up to 150 psig (10 barg), this can be achieved by use of the orifice fittings supplied with the instrument. Section 3.5.1 and Figure 3.4 show a typical arrangement for measuring non-hazardous gas at atmospheric or elevated pressure.

In applications where the sample gas has a very high flow rate it is advisable to use an instrument by-pass arrangement to provide the minimal flow rates which the sensor requires. Excessive flow restriction can cause back-pressure across the sensor leading to a discrepancy between the readings recorded and those expected.

Measurement of Dewpoints Drier than -70°Cdp

The HygroPort I.S. Sampling System is optimized for fast response. Therefore, when measuring very dry dewpoints, certain steps need to be taken to insure that the best accuracy is achieved:

1. Remove the sintered filter from the inlet port.
2. Make sure that all tubing and fittings used are made from stainless steel.

The purpose of this is to reduce the possibility of any moisture being trapped upstream of the sensor; prolonging the dry-down process; or permeating into the sample line through unsuitable tubing - such as PTFE.

Due to the significantly lower levels of moisture present at dewpoints of this level, the response times of the sensor will be significantly increased. The table below offers an approximate guide to the times taken for the instrument to stabilize at a given dew point (from a starting point of 10°Cdp ambient):

Target Dewpoint	T100 response time from ambient (hours)
-112°F (-80°C)	12
-130°F (-90°C)	48
-148°F (-100°C)	96

6.1 General Operational Guidelines

General guidelines to be followed when setting-up a sampling system are as follows:

- **Insure that the sample is representative of the gas under test**

  To insure that the sample is representative of the process being monitored, the sample point should be as close to the critical measurement point as possible. Also, never sample from the bottom of a pipe where entrained liquids may be drawn into the instrument's sample input line.

- **Minimize the "dead space" in sample lines**

  Dead space in sample lines causes moisture entrapment points, increased system response times or measurement errors as the trapped moisture is released into the passing sample gas, producing an increase in partial vapor pressure.

  Avoid the use of too many fittings, in-line couplings or other unnecessary tubing. Sample tubing should, ideally, be specially designed for each application rather than adapted from that previously installed for another application. Dead space in sample lines increases response time by holding water molecules which are more slowly released to the passing gas sample.

- **Remove any particulate matter or oil from the gas sample**

  Particulate matter can damage the sensors. If particulate matter, such as degraded desiccant, pipe scale and rust are likely to be present in the sample gas, use a particulate in-line filter. Kahn Instruments' Technical Sales Department can to provide advice on appropriate methods of filtration.

- **Use high quality sample tube fittings**

  The sample tubing must be capable of withstanding the operating pressure of the sample line. Wherever possible, always use stainless steel tubing and fittings. This is particularly important at low dewpoints since other materials, e.g. nylon, have hygroscopic characteristics and adsorb moisture on the tube walls, giving rise to slower measurement response and, under certain circumstances, false dewpoints. For temporary applications, or where stainless steel tubing is not practical, use high quality, thick-walled PTFE tubing, which exhibits similar qualities to stainless steel.

  In order to minimize response time, always use the shortest run of tubing and the smallest diameter possible. Take care not to induce pressure differentials by aiming for too high a flow rate through too small a diameter.

  Kahn Instruments supplies a range of precision pressure fittings suitable for use with the HygroPort I.S. instrument. Contact Kahn Instruments for details of the items available.

- **Gas samples**

  Gases containing entrained solids should be filtered before application to the instrument. Please consult Kahn Instruments prior to the measurement of any sample suspected to be corrosive.

  Care should be taken with gas mixtures containing potentially condensable components in addition to water vapor, e.g. oil, to insure that only water vapor is present in the sample. Once present on the surface of the sensors, oil will remain, and reduce the sensitivity of the sensor.

POSSIBLE INJURY! The tubing, valves and other apparatus attached to this instrument must be adequate for the maximum pressure which will be applied, otherwise physical injury to the operator or bystander is possible.

Before disconnecting the HygroPort I.S. from the gas line it is essential to vent the system to atmospheric pressure, otherwise severe injury could result.

7 CALIBRATION

7.1 Traceability

The calibration of this instrument is traceable to national standards. For this reason the instrument should only be calibrated in an accredited e.g. NIST (U.S.) or UKAS (U.K.) standards laboratory.

If these facilities do not exist it is recommended that the instrument be returned to Kahn Instruments Inc. or one of its approved agents.

A calibration certificate bearing a seven point calibration is issued with each instrument.

Figure 7.1 shows a typical seven point calibration certificate.

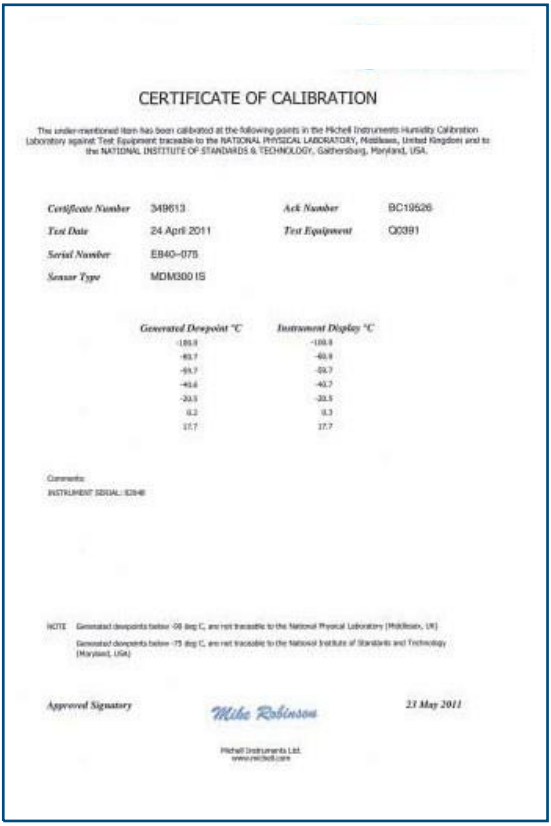

CERTIFICATE OF CALIBRATION

The under-mentioned item has been calibrated at the following points in the Michell Instruments Humidity Calibration Laboratory against Test Equipment traceable to the NATIONAL PHYSICAL LABORATORY, Middlesex, United Kingdom and to the NATIONAL INSTITUTE OF STANDARDS & TECHNOLOGY, Gaithersburg, Maryland, USA.

Certificate Number	349613	*Ack Number*	BC19526
Test Date	24 April 2011	*Test Equipment*	Q0391
Serial Number	EB40-075		
Sensor Type	MDM300 IS		

Generated Dewpoint °C	*Instrument Display °C*
-100.0	-100.0
-60.7	-60.8
-59.7	-59.7
-40.6	-40.7
-20.5	-20.5
0.2	0.3
17.7	17.7

Comments:
INSTRUMENT SERIAL: 62640

NOTE Generated dewpoints below -08 deg C, are not traceable to the National Physical Laboratory (Middlesex, UK)
Generated dewpoints below -75 deg C, are not traceable to the National Institute of Standards and Technology (Maryland, USA)

Approved Signatory Mike Robinson *23 May 2011*

Michell Instruments Ltd.
www.michell.com

Figure 7.1 Typical 7-point calibration certificate

7.2 Calibration Method

WARNING:
These procedures require the use of specialized test equipment and calibration adjustments should only be carried out by qualified personnel. If not correctly carried out, the instrument's calibration can be lost.

The calibration procedure for the instrument is as follows:

1. Turn on the instrument, allow the initialization period to complete and allow sufficient time for it to stabilize.
2. Insure the instrument is set up with sample gas as AIR and operating pressure as ATMOS.
3. Insure that the temperature units are set up as °C and the primary display is reading Dewpoint.
4. Insure that all sample tubing and connectors are made from stainless steel and are of suitable quality. Remove the sintered filter from the inlet of the HygroPort I.S.
5. Connect the HygroPort I.S. to a dewpoint generator and establish a gas flow through the instrument.
6. Apply a dewpoint of -100°C and allow the instrument's reading to stabilize for a minimum of 96 hours (including dry down). Measurement OK must be displayed in the status line when readings are taken.
7. Record the applied REF dewpoint and the corresponding HygroPort I.S. display reading.
8. Repeat steps 5 and 6 at all the required dewpoint values over the operating range of the instrument, as shown in Table 6.1, allowing the stabilization times shown before recording consecutive readings.

A set of results similar, for example, to that shown in Table 6.1 could be generated over the calibration range of the instrument.

DP REF °C	Stabilize Time (Hours)	HygroPort I.S. Rdg °C	DP REF °C	Stabilize Time (Hours)	HygroPort I.S. Rdg °C
-100	96	-99.8	-30	1	-30.1
-80	12	-79.7	-20	1	-19.9
-70	8	-70	-10	1	-10
-60	4	-59.8	0	1	0.1
-50	2	-49.8	10	1	10
-40	1	-39.9	20	1	20

Table 7.1 Example of calibration run readings

7.3 Calibration Correction Method

To enter the Calibration Menu screen, highlight CALIBRATION from the Main Menu by using a combination of the scroll up and scroll down keys and press the Enter key.

NOTE: Any logging procedure currently in operation must be cancelled before the calibration procedures can be entered.

Entry to the Calibration Menu is protected by a PIN which must first be entered. The PIN (4876) is entered in a similar manner to that described in Section 2.5.

This gives access to the HygroPort I.S. calibration look-up table as shown in Figure 7.2 and provides the facility to select and change any single or number of points by means of the scroll up, scroll down, scroll right and scroll left keys.

Figure 7.2 HygroPort I.S. calibration correction screen

The look-up table is divided into three columns. The values in the first column POINT represent the thirteen nominal calibration points, spread at 10°C intervals over the instruments operating range of -100 to +20°C (-148 to +68°F). These points cannot be edited.

The second column of the table represents the value of the reference (REF) dewpoint standard applied at that particular point and the value in the column immediately to the right represents the reading that the HygroPort I.S. was showing at the corresponding REF level input.

The values in both the REF and HygroPort I.S. values can be edited by means of the scroll up and scroll down keys. The scroll right and scroll left keys provide the means of switching between corresponding table columns.

To edit a set of look-up table values, proceed as follows (Figure 7.3 shows the key sequence):

1. Initially, upon entering the look-up table, the REF column is highlighted. From the calibration run (see Table 6.1) enter the exact value of the REF dewpoint supplied to the instrument (100.1) by using the scroll up and scroll down keys.
2. To change a single point only: use the scroll right key (press 5 times) to highlight the corresponding HygroPort I.S. row entry and use the scroll up and scroll down keys to edit this value to the value recorded during the calibration run (99.8). **Alternatively, if all values are to be edited, enter all five** REF **points and then enter all the corresponding HygroPort I.S. points.**
3. Repeat steps 1 and 2 above for all the table entries that need to be made.
4. After the last entry has been made, press the Enter key.
5. To accept the changes press the scroll right key or, to return to the Calibration Menu screen without making any changes, press the scroll left key.

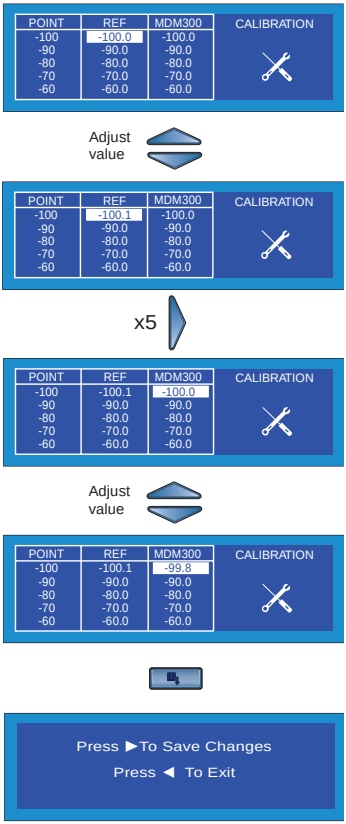

Figure 7.3 Edit HygroPort I.S. look-up table

8 PREPARATION FOR SHIPPING

For shipping purposes the instrument should be packed into its original carton, the latter providing the recommended degree of protection during transit.

To prepare the instrument for shipping, proceed as follows:

1. Turn the instrument off and remove any connections to the Gas In and Gas Out ports and any external transmitters connected to it.
2. If installed, remove the instrument from its carrying case.
3. Pack the instrument in its original case (1) as shown in Figure 8.1.
   NOTE: Any accessories should be packed in the box (4). Unless returning them for repair, it is not necessary to return any external transmitters or the battery charger.
4. Create a packing list detailing all equipment contained in the box, place it inside the box and seal the box.

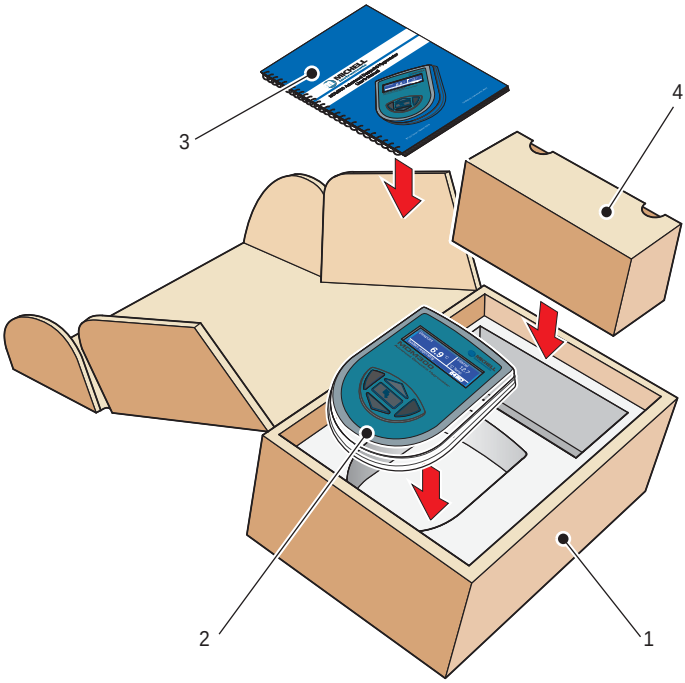

Figure 8.1 Instrument packing details

Appendix A

Technical Specifications

Appendix A Technical Specifications

Performance	
Measurement Technology	Kahn ceramic sensor
Accuracy	±1.8ºF (±1ºC) from -76 to +68ºFdp (-60 to +20ºCdp) ±3.6ºF (±2ºC) from -148 to -76ºFdp (-100 to -60ºCdp) 0.3ºF (±0.2ºC) temperature
Calibrated Measurement Range	For Spot Checks -95 to +68^{0}Fdp (-70 to +20^{0}Cdp) For Online Analysis -148 to -95^{0}Fdp (100 ot -70^{0}Cdp)
Uncalibrated Readings From	+68 to +86^{0}Fdp (+20 to +30^0 Cdp)
Measurement Units	°F, °C, K dewpoint & gas temperature ppm_W & g/kg for air, N_2, H_2, CO_2, SF_6 ppm_V, lb/MMscf & g/m^3 for natural gas ppm_V, g/m^3 & %RH
Pressure Units	Psig, barg, KPa, bara, psia, MPa
Resolution (display)	0.1 for all dewpoint derived units and auto ranging where appropriate
Resolution (measurement)	Better than 0.2ºFdp (0.1ºCdp)
Typical Response Speed	T95 in ≤30 minutes to -76ºF (-60ºC)
Sample Gas Flow	0.5 to 1 scfh (0.2 to 0.5 NL/min)
Electrical Specifications	
Battery	4.8 V internally mounted Nickel Metal Hydride (NiMH) battery
Battery Operating Life	More than 24 hours of typical usage between charges
Battery Charger	Intelligent charger, NOT certified for hazardous area use. Charger supply voltage: 100 to 240 V AC, 50/60 Hz, 8 VA
Operating Conditions	
Operating Pressure	0-5000 psig / 350 barg max
Operating Environment	Outdoors 0 to +100% RH condensing
Operating Temperature	-4 to +122ºF (-20 to +50ºC)
Storage / Transport Temperature	-40 to +158ºF (-40 to +70ºC)
Altitude	Up to 6562ft (2000m)
Mechanical Specifications	
Display	Blue LCD graphical display
Enclosure Type	Steel fiber-loaded high-impact polyamide 6
IP/NEMA Rating	NEMA 4 / IP66
Gas Connections	1/8" NPT female (other options available)
Gas Wetted Materials	AISI 316L stainless steel, PTFE Seal, Borosilicate glass, ceramic

Outline Dimensions	8.6 x 6.7 x 3.5" (218 x 170 x 90mm) (d x w x h)
Weight	3.3 lbs. (1.5 kg)
Data Logging	Capacity: 8Mb Log interval: 5 to 60 sec Maximum log file size: 60kb
Communicatons	(Wireless) Bluetooth™ range up to 16ft (5m) (Version 2.0)
Languages	English, French, German, Italian, Portuguese

A.1 Dimensions

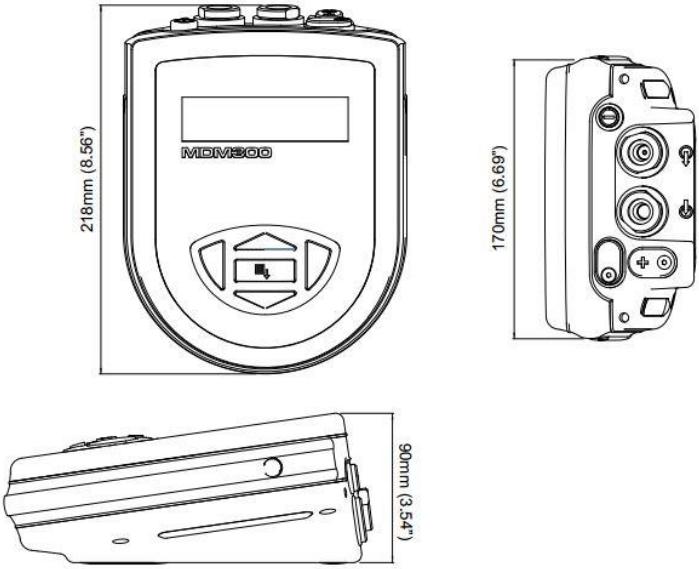

Figure A.1 Dimensions – Hygroport I.S.

Appendix B

Hazardous Area Certification

Appendix B Hazardous Area Certification

The HygroPort I.S is certified compliant to the ATEX Directive (2014/34/EU), and IECEx for safe use within Zone 0 hazardous area, and has been assessed so by SGS FIMKO Oy, FINLAND (Notified Body 0598).

The HygroPort I.S is certified compliant to North American Standards (USA and Canada) for use within Class I, Division 1, Groups A, B, C & D and Class 1, ZONE 0 Hazardous Locations and has been assessed so by QPS.

B.1 Product Standards

This product conforms to the Standards:

EN60079-0:2018	IEC60079-11:2011
EN60079-11:2011	IEC60079-0:2017
UL60079-0:19	IEC60079-26:2006
UL60079-11:19	C22.2 No. 60079-0-19
UL61010-1:3rd	C22.2 No. 60079-11-14
ANSI/IEC 60529:2004	C22.2 No. 61010-1:3rd

B.2 Product Certification

This product is attributed with the product certification codes:

ATEX & IECEx
II 1 G Ex ia IIC T4 Ga (–20ºC to +50ºC)

North American
IS - Class 1, Division 1, Groups A, B, C, D, T4
Class I, Zone 0, AEx ia IIC T4 Ga
Ex ia IIC T4 Ga
Ta=-20ºC to +50ºC

B.3 Global Certificates / Approvals

ATEX	BASEEFA09ATEX0149
IECEx	IECEX BAS09.0063
cQPSus	LR1589-2
INMETRO	NCC14.03165

B.4 Input Terminal Parameters

External Sensor Socket		Charging Socket	
U_i	= 28V	U_m	= 18V
I_i	= 93mA		
P_i	= 650 mW		
PO	= 0		
C_i	= 0		
L_i	= 0		

B.5 Special Conditions of Use

None

B.6 Maintenance and Installation

The HygroPort I.S must only be installed by suitably qualified personnel and in accordance with the instructions provided and the terms of the applicable product certificates.

Maintenance and servicing of the product must only be carried out by suitably trained personnel or returned to an approved Kahn Service Center.

Appendix C

Datalog Status Display

Appendix C Datalog Status Display

Introduction

When the status of the current log file is displayed, see Figure C.1, the ST column in the current log file display represents the instrument's status at the time that each log point is recorded.

#	INT	EXT	ST
106	26.8	100.0	0028
107	26.2	-90.0	0028
108	25.9	-80.0	0028
109	25.8	-70.0	0028
110	25.5	-60.0	0028

File	CR270309
INT	RH
EXT.	EXT_DP
INTVAL	05 Sec
D#	090327
T#	123606

Figure C.1 Current datalog file display

This column shows a hexadecimal representation of the instrument's 16-bit status register shown below in Figure C.2. Bit 1 is the least significant bit. The four most significant bits, Bits 13 to 16 are for Kahn Instruments' service use and so the first character in any HygroPort I.S. ST display will always read 0.

Status register Bit position															
16	15	14	13	12	11	10	9	8	7	6	5	4	3	2	1
N/A	N/A	N/A	N/A	0/1	0/1	0/1	0/1	0/1	0/1	0/1	0/1	0/1	0/1	0/1	N/A

Figure C.2 HygroPort I.S. status register

For the example given for each of the log plots shown on in Figure C.1 (Hex 0028), the output pattern of the status register will be as shown in Figure C.3.

Status register Bit position															
16	15	14	13	12	11	10	9	8	7	6	5	4	3	2	1
N/A	N/A	N/A	N/A	0	0	0	0	0	0	**1**	0	**1**	0	0	N/A

Figure C.3 HygroPort I.S. status register (Hex 28)

Each of the error bits set high (1) represents a specific status or error condition. In this example, Bits 4 and 6 are set high indicating that two (status) conditions exist.

Table C.1 shows the status flags associated with each Bit of the status register. If a status flag is set high then the associated condition exists. If it is set low, then that condition does not exist.

Status Register Bit in Hex	Message	Details
0x0002 = BIT 2	Internal sensor error	Reading out of range (beyond +30/-120ºC)
0x0004= BIT 3	Internal thermistor error	Reading out of range (beyond +100/-40ºC)
0x0008 = BIT 4	External sensor error	External Sensor Input out of range (<4 mA / >20 mA)
0x0010 = BIT 5	Battery low	Battery voltage <4.7 V
0x0020 = BIT 6	Measurement in progress	Internal dewpoint not stable
0x0040 = BIT 7	Measurement OK	Internal dewpoint stable
0x0080 = BIT 8	Log finished	Log file has reached the maximum of 10,000 logs and logging has been stopped
0x0100 = BIT 9	Internal sensor not found	Could not detect internal sensor on power up
0x0200 = BIT 10	Default CONFIG file Used	Config. file missing, new file created and default settings used
0x0800 = BIT 12	Initializing internal sensor	Indicates system in purging phase

Table C.1 Status register flags

For the example given in Figure C.1, from Table C.1, Hex 28 translates, reading from right to left, as Bit 4 set (External sensor error) and Bit 6 set (Measurement in progress). Therefore, at the time that these log points were taken, the external sensor was out of range and the internal dewpoint was not stable.

Appendix D

FCC Declaration

Appendix D FCC Declaration

HygroPort I.S. Advanced Dewpoint Hygrometer.

This Device complies with FCC Rules Part 15 Subpart B Unintentional Radiators Class B digital devices. Operation is subject to the following conditions:

1) This device may not cause harmful interference
2) This device must accept any interference received, including interference that may cause undesired operation.

Note: This product has been tested and found to comply with the limits or Class B digital devices, pursuant to Part 15 of the FCC rules. This product generates, uses and can radiate radio frequency energy and, if not installed and used in accordance with the instructions, may cause harmful interference to radio communications. However, there is no guarantee that interference will not in a particular installation. If this product does cause harmful interference to radio reception, which may be determined by turning the product on & off, the user is encouraged to try to correct the interference by one or more of the following measures:

- Reorient or relocate the receiving antenna,
- Increase the separation between the product and receiver,
- Connect the equipment into an outlet on a circuit different from that to which the receiver is connected
- Consult the dealer or an experienced radio/TV technician for help.

This product must be operated as per the operating instructions provided.
Do not make any alterations or modifications to the product. Any unauthorised alterations or modifications made to this product may require you to stop operating the product.

Canadian Radio Interference Regulations.
This Class B digital product complies with Canadian ICES-003, CISPR 22 :1997.
Règlement canadien sur les interférences radio. Ce produit numérique de classe B est conforme à la norme NMB-003, CISPR 22: 1997.

Signed for, and on behalf of,
Michell Instruments Ltd.

Andrew M.V. Stokes, Technical Director
Issue date: 05/2011